US009048892B2

(12) **United States Patent**
Walton et al.

(10) **Patent No.: US 9,048,892 B2**
(45) **Date of Patent: Jun. 2, 2015**

(54) **MIMO SYSTEM WITH MULTIPLE SPATIAL MULTIPLEXING MODES**

(71) Applicant: **QUALCOMM Incorporated**, San Diego, CA (US)

(72) Inventors: **J. Rodney Walton**, Carlisle, MA (US); **John W. Ketchum**, Harvard, MA (US); **Mark S. Wallace**, Bedford, MA (US); **Steven J. Howard**, Ashland, MA (US)

(73) Assignee: **QUALCOMM Incorporated**, San Diego, CA (US)

(*) Notice: Subject to any disclaimer, the term of this patent is extended or adjusted under 35 U.S.C. 154(b) by 299 days.

(21) Appl. No.: **13/857,025**

(22) Filed: **Apr. 4, 2013**

(65) **Prior Publication Data**

US 2013/0235825 A1 Sep. 12, 2013

Related U.S. Application Data

(63) Continuation of application No. 12/649,040, filed on Dec. 29, 2009, which is a continuation of application No. 10/693,429, filed on Oct. 23, 2003, now Pat. No. 8,208,364.

(60) Provisional application No. 60/421,309, filed on Oct. 25, 2002.

(51) **Int. Cl.**
H04B 7/04 (2006.01)
H04L 25/02 (2006.01)
(Continued)

(52) **U.S. Cl.**
CPC ***H04B 7/0417*** (2013.01); *H04J 11/003* (2013.01); *H04J 11/0053* (2013.01);
(Continued)

(58) **Field of Classification Search**
None
See application file for complete search history.

(56) **References Cited**

U.S. PATENT DOCUMENTS

4,736,371 A 4/1988 Tejima et al.
4,750,198 A 6/1988 Harper
(Continued)

FOREIGN PATENT DOCUMENTS

AU 2002259221 11/2002
CA 2690245 A1 10/2001
(Continued)

OTHER PUBLICATIONS

Taiwan Search Report—TW099105740—TIPO—Apr. 22, 2014.
(Continued)

Primary Examiner — Faruk Hamza
Assistant Examiner — Andrew Oh
(74) *Attorney, Agent, or Firm* — QUALCOMM IP Department; James Hunt Yancey, Jr.

(57) **ABSTRACT**

A MIMO system supports multiple spatial multiplexing modes for improved performance and greater flexibility. These modes may include (1) a single-user steered mode that transmits multiple data streams on orthogonal spatial channels to a single receiver, (2) a single-user non-steered mode that transmits multiple data streams from multiple antennas to a single receiver without spatial processing at a transmitter, (3) a multi-user steered mode that transmits multiple data streams simultaneously to multiple receivers with spatial processing at a transmitter, and (4) a multi-user non-steered mode that transmits multiple data streams from multiple antennas (co-located or non co-located) without spatial processing at the transmitter(s) to receiver(s) having multiple antennas. For each set of user terminal(s) selected for data transmission on the downlink and/or uplink, a spatial multiplexing mode is selected for the user terminal set from among the multiple spatial multiplexing modes supported by the system.

20 Claims, 13 Drawing Sheets

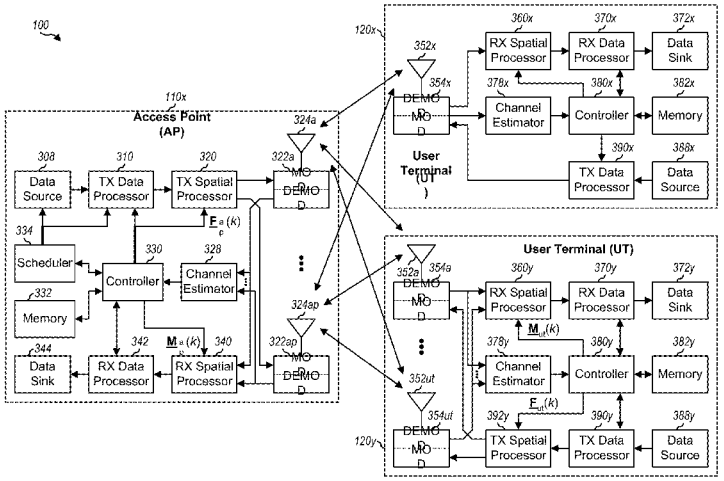

(51) **Int. Cl.**

H04B 7/06	(2006.01)
H04B 7/08	(2006.01)
H04L 1/00	(2006.01)
H04L 1/06	(2006.01)
H04W 74/04	(2009.01)
H04J 11/00	(2006.01)
H04W 72/04	(2009.01)
H04L 5/00	(2006.01)
H04L 27/26	(2006.01)
H04L 25/03	(2006.01)
H04W 16/28	(2009.01)
H04W 52/50	(2009.01)

(52) **U.S. Cl.**

CPC *H04W 72/046* (2013.01); *H04L 5/0073* (2013.01); *H04L 27/2675* (2013.01); *H04L 25/03891* (2013.01); ***H04L 25/0248*** (2013.01); *H04B 7/043* (2013.01); *H04B 7/0421* (2013.01); *H04B 7/0434* (2013.01); ***H04B 7/0452*** (2013.01); ***H04B 7/0628*** (2013.01); *H04B 7/0669* (2013.01); ***H04B 7/0689*** (2013.01); ***H04B 7/0697*** (2013.01); ***H04B 7/0854*** (2013.01); ***H04B 7/0871*** (2013.01); ***H04L 1/0001*** (2013.01); ***H04L 1/0003*** (2013.01); ***H04L 1/0009*** (2013.01); ***H04L 1/0017*** (2013.01); ***H04L 1/06*** (2013.01); *H04L 25/0224* (2013.01); *H04L 25/0226* (2013.10); ***H04L 25/0242*** (2013.01); ***H04L 25/03343*** (2013.01); ***H04L 27/2601*** (2013.01); ***H04L 27/2602*** (2013.01); ***H04L 27/261*** (2013.01); ***H04L 27/2647*** (2013.01); *H04W 16/28* (2013.01); *H04W 52/50* (2013.01); ***H04W 74/04*** (2013.01)

(56) **References Cited**

U.S. PATENT DOCUMENTS

4,797,879	A	1/1989	Habbab et al.
5,239,677	A	8/1993	Jasinski
5,241,544	A	8/1993	Jasper et al.
5,295,159	A	3/1994	Kerpez
5,404,355	A	4/1995	Raith
5,422,733	A	6/1995	Merchant et al.
5,471,647	A	11/1995	Gerlach et al.
5,479,447	A	12/1995	Chow et al.
5,491,837	A	2/1996	Haartsen
5,493,712	A	2/1996	Ramesh et al.
5,506,861	A	4/1996	Bottomley
5,509,003	A	4/1996	Snijders et al.
5,528,581	A	6/1996	De Bot
5,606,729	A	2/1997	D'Amico et al.
5,638,369	A	6/1997	Ayerst et al.
5,677,909	A	10/1997	Heide
5,710,768	A	1/1998	Ziv et al.
5,729,542	A	3/1998	Dupont
5,790,550	A	8/1998	Peeters et al.
5,818,813	A	10/1998	Saito et al.
5,822,374	A	10/1998	Levin
5,832,387	A	11/1998	Bae et al.
5,859,875	A	1/1999	Kato et al.
5,867,478	A	2/1999	Baum et al.
5,867,539	A	2/1999	Koslov
5,883,887	A	3/1999	Take et al.
5,886,988	A	3/1999	Yun et al.
5,959,965	A	9/1999	Ohkubo et al.
5,973,638	A	10/1999	Robbins et al.
5,982,327	A	11/1999	Vook et al.
6,005,876	A	12/1999	Cimini, Jr. et al.
6,011,963	A	1/2000	Ogoro
6,049,548	A	4/2000	Bruno et al.
6,067,290	A	5/2000	Paulraj et al.
6,072,779	A	6/2000	Tzannes et al.
6,084,915	A	7/2000	Williams
6,097,771	A	8/2000	Foschini
6,115,354	A	9/2000	Weck
6,122,247	A	9/2000	Levin et al.
6,131,016	A	10/2000	Greenstein et al.
6,141,388	A	10/2000	Servais et al.
6,141,542	A	10/2000	Kotzin et al.
6,141,567	A	10/2000	Youssefmir et al.
6,144,711	A	11/2000	Raleigh et al.
6,154,661	A	11/2000	Goldburg
6,163,296	A	12/2000	Lier et al.
6,167,031	A	12/2000	Olofsson et al.
6,175,588	B1	1/2001	Visotsky et al.
6,178,196	B1	1/2001	Naguib et al.
6,192,256	B1	2/2001	Whinnett
6,205,410	B1	3/2001	Cai
6,222,888	B1	4/2001	Kao et al.
6,232,918	B1	5/2001	Wax et al.
6,266,528	B1	7/2001	Farzaneh
6,275,543	B1	8/2001	Petrus et al.
6,278,726	B1	8/2001	Mesecher et al.
6,292,917	B1	9/2001	Sinha et al.
6,298,035	B1	10/2001	Heiskala
6,298,092	B1	10/2001	Heath, Jr. et al.
6,308,080	B1	10/2001	Burt et al.
6,314,113	B1	11/2001	Guemas
6,314,289	B1	11/2001	Eberlein et al.
6,317,612	B1	11/2001	Farsakh
6,330,277	B1	12/2001	Gelblum et al.
6,330,293	B1	12/2001	Klank et al.
6,330,462	B1	12/2001	Chen
6,333,953	B1	12/2001	Bottomley et al.
6,339,399	B1	1/2002	Andersson et al.
6,345,036	B1	2/2002	Sudo et al.
6,346,910	B1	2/2002	Ito
6,347,234	B1	2/2002	Scherzer
6,348,036	B1	2/2002	Looney et al.
6,351,499	B1	2/2002	Paulraj et al.
6,363,267	B1	3/2002	Lindskog et al.
6,369,758	B1	4/2002	Zhang
6,377,812	B1	4/2002	Rashid-Farrokhi et al.
6,385,264	B1	5/2002	Terasawa et al.
6,426,971	B1	7/2002	Wu et al.
6,452,981	B1	9/2002	Raleigh et al.
6,463,290	B1	10/2002	Stilp et al.
6,473,467	B1	10/2002	Wallace et al.
6,478,422	B1	11/2002	Hansen
6,492,942	B1	12/2002	Kezys
6,510,184	B1	1/2003	Okamura
6,512,737	B1	1/2003	Agee
6,515,617	B1	2/2003	Demers et al.
6,532,225	B1	3/2003	Chang et al.
6,532,255	B1	3/2003	Gunzelmann et al.
6,532,562	B1	3/2003	Chou et al.
6,545,997	B1	4/2003	Bohnke et al.
6,574,211	B2	6/2003	Padovani et al.
6,574,267	B1	6/2003	Kanterakis et al.
6,574,271	B2	6/2003	Mesecher et al.
6,594,473	B1	7/2003	Dabak et al.
6,594,798	B1	7/2003	Chou et al.
6,597,682	B1	7/2003	Kari
6,608,874	B1	8/2003	Beidas et al.
6,611,231	B2	8/2003	Crilly et al.
6,615,024	B1	9/2003	Boros et al.
6,628,702	B1	9/2003	Rowitch et al.
6,631,121	B1	10/2003	Yoon
6,636,496	B1	10/2003	Cho et al.
6,636,568	B2	10/2003	Kadous
6,654,590	B2	11/2003	Boros et al.
6,654,613	B1	11/2003	Maeng et al.
6,668,161	B2	12/2003	Boros et al.
6,683,916	B1	1/2004	Sartoti et al.
6,690,660	B2	2/2004	Kim et al.
6,693,992	B2	2/2004	Jones et al.
6,694,155	B1	2/2004	Chin et al.
6,697,346	B1	2/2004	Halton et al.
6,711,121	B1	3/2004	Gerakoulis et al.
6,728,233	B1	4/2004	Park et al.

(56) **References Cited**

U.S. PATENT DOCUMENTS

6,731,668 B2 5/2004 Ketchum
6,735,188 B1 5/2004 Becker et al.
6,738,020 B1 5/2004 Lindskog et al.
6,744,811 B1 6/2004 Kantschuk
6,747,963 B1 6/2004 Park et al.
6,751,187 B2 6/2004 Walton et al.
6,751,199 B1 6/2004 Sindhushayana et al.
6,751,444 B1 6/2004 Meiyappan
6,751,480 B2 6/2004 Kogiantis et al.
6,757,263 B1 6/2004 Olds
6,760,313 B1 7/2004 Sindhushayana et al.
6,760,388 B2 7/2004 Ketchum et al.
6,760,882 B1 7/2004 Gesbert et al.
6,763,244 B2 7/2004 Chen et al.
6,768,727 B1 7/2004 Sourour et al.
6,771,706 B2 8/2004 Ling et al.
6,785,341 B2 8/2004 Walton et al.
6,785,513 B1 8/2004 Sivaprakasam
6,788,948 B2 9/2004 Lindskog et al.
6,792,041 B1 9/2004 Kim et al.
6,795,424 B1 9/2004 Kapoor et al.
6,798,738 B1 9/2004 Do et al.
6,801,790 B2 10/2004 Rudrapatna
6,802,035 B2 10/2004 Catreux et al.
6,804,191 B2 10/2004 Richardson
6,821,535 B2 11/2004 Nurmi et al.
6,842,460 B1 1/2005 Olkkonen et al.
6,847,828 B2 1/2005 Miyoshi et al.
6,850,252 B1 2/2005 Hoffberg
6,850,498 B2 2/2005 Heath et al.
6,859,503 B2 2/2005 Pautler et al.
6,862,271 B2 3/2005 Medvedev et al.
6,862,440 B2 3/2005 Sampath
6,868,079 B1 3/2005 Hunt
6,873,651 B2 3/2005 Tesfai et al.
6,879,578 B2 4/2005 Pan et al.
6,879,579 B1 4/2005 Myles et al.
6,882,868 B1 4/2005 Shattil
6,885,708 B2 4/2005 Thomas et al.
6,888,809 B1 5/2005 Foschini et al.
6,888,899 B2 5/2005 Raleigh et al.
6,891,858 B1 5/2005 Mahesh et al.
6,907,270 B1 6/2005 Blanz
6,920,192 B1 7/2005 Laroia et al.
6,920,194 B2 7/2005 Stopler et al.
6,927,728 B2 8/2005 Vook et al.
6,937,592 B1 8/2005 Heath, Jr. et al.
6,940,917 B2 9/2005 Menon et al.
6,950,632 B1 9/2005 Yun et al.
6,952,426 B2 10/2005 Wu et al.
6,952,454 B1 10/2005 Jalali et al.
6,956,813 B2 10/2005 Fukuda
6,956,906 B2 10/2005 Tager et al.
6,959,171 B2 10/2005 Tsien et al.
6,961,388 B2 11/2005 Ling et al.
6,963,742 B2 11/2005 Boros et al.
6,965,762 B2 11/2005 Sugar et al.
6,970,722 B1 11/2005 Lewis
6,975,868 B2 12/2005 Joshi et al.
6,980,601 B2 12/2005 Jones
6,980,800 B2 12/2005 Noerpel et al.
6,985,434 B2 1/2006 Wu et al.
6,985,534 B1 1/2006 Meister
6,987,819 B2 1/2006 Thomas et al.
6,990,059 B1 1/2006 Anikhindi et al.
6,992,972 B2 1/2006 Van Nee
6,996,380 B2 2/2006 Dent
7,002,900 B2 2/2006 Walton et al.
7,003,044 B2 2/2006 Subramanian et al.
7,006,464 B1 2/2006 Gopalakrishnan et al.
7,006,483 B2 2/2006 Nelson, Jr. et al.
7,006,848 B2 2/2006 Ling et al.
7,009,931 B2 3/2006 Ma et al.
7,012,978 B2 3/2006 Talwar
7,020,110 B2 3/2006 Walton et al.
7,020,482 B2 3/2006 Medvedev et al.
7,020,490 B2 3/2006 Khatri
7,023,826 B2 4/2006 Sjoberg et al.
7,024,163 B1 4/2006 Barratt et al.
7,031,671 B2 4/2006 Mottier
7,035,359 B2 4/2006 Molnar
7,039,125 B2 5/2006 Friedman
7,042,858 B1 5/2006 Ma et al.
7,054,378 B2 5/2006 Walton et al.
7,058,367 B1 6/2006 Luo et al.
7,062,294 B1 6/2006 Rogard et al.
7,068,628 B2 6/2006 Li et al.
7,072,381 B2 7/2006 Atarashi et al.
7,072,410 B1 7/2006 Monsen
7,072,413 B2 7/2006 Walton et al.
7,076,263 B2 7/2006 Medvedev et al.
7,088,671 B1 8/2006 Monsen
7,095,709 B2 8/2006 Walton et al.
7,095,722 B1 8/2006 Walke et al.
7,099,377 B2 8/2006 Berens et al.
7,103,325 B1 9/2006 Jia et al.
7,110,378 B2 9/2006 Onggosanusi et al.
7,110,463 B2 9/2006 Wallace et al.
7,113,499 B2 9/2006 Nafie et al.
7,116,652 B2 10/2006 Lozano
7,120,134 B2 10/2006 Tiedemann, Jr. et al.
7,120,199 B2 10/2006 Thielecke et al.
7,127,009 B2 10/2006 Berthet et al.
7,130,362 B2 10/2006 Girardeau et al.
7,133,459 B2 11/2006 Onggosanusi et al.
7,137,047 B2 11/2006 Mitlin et al.
7,149,239 B2 12/2006 Hudson
7,149,254 B2 12/2006 Sampath
7,151,809 B2 12/2006 Ketchum et al.
7,155,171 B2 12/2006 Ebert et al.
7,158,563 B2 1/2007 Ginis et al.
7,164,649 B2 1/2007 Walton et al.
7,164,669 B2 1/2007 Li et al.
7,184,713 B2 2/2007 Kadous et al.
7,187,646 B2 3/2007 Schramm
7,190,749 B2 3/2007 Levin et al.
7,191,381 B2 3/2007 Gesbert et al.
7,194,237 B2 3/2007 Sugar et al.
7,197,084 B2 3/2007 Ketchum et al.
7,200,404 B2 4/2007 Panasik et al.
7,206,354 B2 4/2007 Wallace et al.
7,218,684 B2 5/2007 Bolourchi et al.
7,221,956 B2 5/2007 Medvedev et al.
7,224,704 B2 5/2007 Lu et al.
7,231,184 B2 6/2007 Eilts et al.
7,233,625 B2 6/2007 Ma et al.
7,238,508 B2 7/2007 Lin et al.
7,242,727 B2 7/2007 Liu et al.
7,248,638 B1 7/2007 Banister
7,248,841 B2 7/2007 Agee et al.
7,254,171 B2 8/2007 Hudson
7,260,153 B2 8/2007 Nissani (Nissensohn)
7,260,366 B2 8/2007 Lee et al.
7,263,119 B1 8/2007 Hsu et al.
7,274,734 B2 9/2007 Tsatsanis
7,277,679 B1 10/2007 Barratt et al.
7,280,467 B2 10/2007 Smee et al.
7,280,625 B2 10/2007 Ketchum et al.
7,283,508 B2 10/2007 Choi et al.
7,289,570 B2 10/2007 Schmidl et al.
7,292,854 B2 11/2007 Das et al.
7,298,778 B2 11/2007 Visoz et al.
7,298,805 B2 11/2007 Walton et al.
7,308,035 B2 12/2007 Rouquette et al.
7,310,304 B2 12/2007 Mody et al.
7,317,750 B2 1/2008 Shattil
7,324,429 B2 1/2008 Walton et al.
7,327,800 B2 2/2008 Oprea et al.
7,333,556 B2 2/2008 Maltsev et al.
7,342,912 B1 3/2008 Kerr et al.
7,356,004 B2 4/2008 Yano et al.
7,356,089 B2 4/2008 Jia et al.
7,379,492 B2 5/2008 Hwang
7,386,076 B2 6/2008 Onggosanusi et al.

(56) **References Cited**

U.S. PATENT DOCUMENTS

7,392,014 B2 6/2008 Baker et al.
7,403,748 B1 7/2008 Keskitalo et al.
7,421,039 B2 9/2008 Malaender et al.
7,453,844 B1 11/2008 Lee et al.
7,466,749 B2 12/2008 Medvedev et al.
7,480,278 B2 1/2009 Pedersen et al.
7,486,740 B2 2/2009 Inanoglu
7,492,737 B1 2/2009 Fong et al.
7,508,748 B2 3/2009 Kadous
7,548,506 B2 6/2009 Ma et al.
7,551,546 B2 6/2009 Ma et al.
7,551,580 B2 6/2009 du Crest et al.
7,573,805 B2 8/2009 Zhuang et al.
7,599,443 B2 10/2009 Ionescu et al.
7,603,141 B2 10/2009 Dravida
7,606,296 B1 10/2009 Hsu et al.
7,606,319 B2 10/2009 Zhang et al.
7,616,698 B2 11/2009 Sun et al.
7,623,871 B2 11/2009 Sheynblat
7,636,573 B2 12/2009 Walton et al.
7,646,747 B2 1/2010 Atarashi et al.
7,653,142 B2 1/2010 Ketchum et al.
7,653,415 B2 1/2010 van Rooyen
7,656,967 B2 2/2010 Tiirola et al.
7,778,337 B2 8/2010 Tong et al.
7,822,140 B2 10/2010 Catreux et al.
7,843,972 B2 11/2010 Nakahara et al.
7,885,228 B2 2/2011 Walton et al.
7,986,742 B2 7/2011 Ketchum et al.
8,134,976 B2 3/2012 Wallace et al.
8,145,179 B2 3/2012 Walton et al.
8,169,944 B2 5/2012 Walton et al.
8,170,513 B2 5/2012 Walton et al.
8,194,770 B2 6/2012 Medvedev et al.
8,203,978 B2 6/2012 Walton et al.
8,208,364 B2 * 6/2012 Walton et al. 370/208
8,218,609 B2 7/2012 Walton et al.
8,254,246 B2 8/2012 Ma et al.
8,260,210 B2 9/2012 Esteve et al.
8,320,301 B2 11/2012 Walton et al.
8,325,836 B2 12/2012 Tong et al.
8,355,313 B2 1/2013 Walton et al.
8,358,714 B2 1/2013 Walton et al.
8,406,118 B2 3/2013 Zhu et al.
8,462,643 B2 6/2013 Walton et al.
8,483,188 B2 7/2013 Walton et al.
8,570,988 B2 10/2013 Wallace et al.
8,855,226 B2 10/2014 Medvedev et al.
2001/0017881 A1 8/2001 Bhatoolaul et al.
2001/0031014 A1 10/2001 Subramanian et al.
2001/0031621 A1 10/2001 Schmutz
2001/0033623 A1 10/2001 Hosur
2001/0038666 A1 11/2001 Mesecher et al.
2001/0046205 A1 11/2001 Easton et al.
2002/0003774 A1 1/2002 Wang et al.
2002/0004920 A1 1/2002 Cho et al.
2002/0018310 A1 2/2002 Hung
2002/0018453 A1 2/2002 Yu et al.
2002/0027951 A1 3/2002 Gormley et al.
2002/0034263 A1 3/2002 Schmidl et al.
2002/0041632 A1 4/2002 Sato et al.
2002/0041635 A1 4/2002 Ma et al.
2002/0044591 A1 4/2002 Lee et al.
2002/0044610 A1 4/2002 Jones
2002/0057659 A1 5/2002 Ozluturk et al.
2002/0062472 A1 5/2002 Medlock et al.
2002/0064214 A1 5/2002 Hattori et al.
2002/0071445 A1 6/2002 Wu et al.
2002/0072336 A1 6/2002 Mottier
2002/0075830 A1 6/2002 Hartman, Jr.
2002/0080735 A1 6/2002 Heath et al.
2002/0085620 A1 7/2002 Mesecher
2002/0085641 A1 7/2002 Baum
2002/0098872 A1 7/2002 Judson
2002/0105928 A1 8/2002 Kapoor et al.
2002/0115473 A1 8/2002 Hwang et al.
2002/0122381 A1 9/2002 Wu et al.
2002/0122393 A1 9/2002 Caldwell et al.
2002/0126803 A1 9/2002 Jones et al.
2002/0127978 A1 9/2002 Khatri
2002/0132600 A1 9/2002 Rudrapatna
2002/0147953 A1 10/2002 Catreux et al.
2002/0150182 A1 10/2002 Dogan et al.
2002/0154705 A1 10/2002 Walton et al.
2002/0155818 A1 10/2002 Boros et al.
2002/0163879 A1 11/2002 Li et al.
2002/0163974 A1 11/2002 Friedman
2002/0181390 A1 12/2002 Mody et al.
2002/0183010 A1 12/2002 Catreux et al.
2002/0184453 A1 12/2002 Hughes et al.
2002/0191535 A1 12/2002 Sugiyama et al.
2002/0193146 A1 12/2002 Wallace et al.
2002/0196842 A1 12/2002 Onggosanusi et al.
2003/0002450 A1 1/2003 Jalali et al.
2003/0003863 A1 1/2003 Thielecke et al.
2003/0003880 A1 1/2003 Ling et al.
2003/0007463 A1 1/2003 Li et al.
2003/0012308 A1 1/2003 Sampath et al.
2003/0016640 A1 1/2003 Onggosanusi et al.
2003/0039317 A1 2/2003 Taylor et al.
2003/0043732 A1 3/2003 Walton et al.
2003/0043887 A1 3/2003 Hudson
2003/0043929 A1 3/2003 Sampath
2003/0045288 A1 3/2003 Luschi et al.
2003/0048856 A1 3/2003 Ketchum et al.
2003/0060173 A1 3/2003 Lee et al.
2003/0064739 A1 4/2003 Lindskog et al.
2003/0072395 A1 4/2003 Jia et al.
2003/0076797 A1 4/2003 Lozano
2003/0076812 A1 4/2003 Benedittis
2003/0078024 A1 4/2003 Magee et al.
2003/0086514 A1 5/2003 Ginis et al.
2003/0092456 A1 5/2003 Dent
2003/0095197 A1 5/2003 Wheeler et al.
2003/0099306 A1 5/2003 Nilsson et al.
2003/0103584 A1 6/2003 Bjerke et al.
2003/0108117 A1 6/2003 Ketchum et al.
2003/0112745 A1 6/2003 Zhuang et al.
2003/0112880 A1 6/2003 Walton et al.
2003/0119452 A1 6/2003 Kim et al.
2003/0123381 A1 7/2003 Zhuang et al.
2003/0123389 A1 7/2003 Russell et al.
2003/0125040 A1 7/2003 Walton et al.
2003/0128656 A1 7/2003 Scarpa
2003/0128658 A1 7/2003 Walton et al.
2003/0139194 A1 7/2003 Onggosanusi et al.
2003/0139196 A1 7/2003 Medvedev et al.
2003/0142732 A1 7/2003 Moshavi et al.
2003/0147371 A1 8/2003 Choi et al.
2003/0153273 A1 8/2003 Ebert et al.
2003/0153320 A1 8/2003 Noerpel et al.
2003/0153360 A1 8/2003 Burke et al.
2003/0157953 A1 8/2003 Das et al.
2003/0157954 A1 8/2003 Medvedev et al.
2003/0161282 A1 * 8/2003 Medvedev et al. 370/329
2003/0162519 A1 8/2003 Smith et al.
2003/0165187 A1 9/2003 Tesfai et al.
2003/0165189 A1 9/2003 Kadous
2003/0185309 A1 10/2003 Pautler et al.
2003/0185310 A1 10/2003 Ketchum et al.
2003/0185311 A1 10/2003 Kim
2003/0186650 A1 10/2003 Liu
2003/0189972 A1 10/2003 Berens et al.
2003/0190897 A1 10/2003 Lei et al.
2003/0202492 A1 10/2003 Akella et al.
2003/0202612 A1 10/2003 Halder et al.
2003/0206558 A1 11/2003 Parkkinen et al.
2003/0223391 A1 12/2003 Malaender et al.
2003/0231706 A1 12/2003 Hwang
2003/0235147 A1 12/2003 Walton et al.
2003/0235149 A1 12/2003 Chan et al.
2003/0235255 A1 12/2003 Ketchum et al.
2003/0236080 A1 12/2003 Kadous et al.
2004/0005887 A1 1/2004 Bahrenburg et al.

(56) **References Cited**

U.S. PATENT DOCUMENTS

2004/0013084	A1	1/2004	Thomas et al.	
2004/0017785	A1	1/2004	Zelst	
2004/0037257	A1	2/2004	Ngo	
2004/0042439	A1*	3/2004	Menon et al.	370/343
2004/0042556	A1	3/2004	Medvedev et al.	
2004/0047284	A1	3/2004	Eidson	
2004/0047292	A1	3/2004	du Crest et al.	
2004/0052228	A1	3/2004	Tellado et al.	
2004/0062192	A1	4/2004	Liu et al.	
2004/0071104	A1	4/2004	Boesel et al.	
2004/0071107	A1	4/2004	Kats et al.	
2004/0076224	A1	4/2004	Onggosanusi et al.	
2004/0081131	A1	4/2004	Walton et al.	
2004/0082356	A1	4/2004	Walton et al.	
2004/0085939	A1	5/2004	Wallace et al.	
2004/0087324	A1	5/2004	Ketchum et al.	
2004/0095907	A1	5/2004	Agee et al.	
2004/0120411	A1	6/2004	Walton et al.	
2004/0121730	A1	6/2004	Kadous et al.	
2004/0136349	A1	7/2004	Walton et al.	
2004/0151108	A1	8/2004	Blasco Claret et al.	
2004/0151122	A1	8/2004	Lau et al.	
2004/0156328	A1	8/2004	Walton et al.	
2004/0160921	A1	8/2004	Kaipainen et al.	
2004/0160987	A1	8/2004	Sudo et al.	
2004/0165684	A1	8/2004	Ketchum et al.	
2004/0176097	A1	9/2004	Wilson et al.	
2004/0179627	A1	9/2004	Ketchum et al.	
2004/0184398	A1	9/2004	Walton et al.	
2004/0198276	A1	10/2004	Tellado et al.	
2004/0203853	A1	10/2004	Sheynblat	
2004/0252632	A1	12/2004	Bourdoux et al.	
2005/0002326	A1	1/2005	Ling et al.	
2005/0047384	A1	3/2005	Wax et al.	
2005/0047515	A1	3/2005	Walton et al.	
2005/0088959	A1	4/2005	Kadous	
2005/0099974	A1	5/2005	Kats et al.	
2005/0111599	A1	5/2005	Walton et al.	
2005/0120097	A1	6/2005	Walton et al.	
2005/0124297	A1	6/2005	Eilts et al.	
2005/0128953	A1	6/2005	Wallace et al.	
2005/0135284	A1	6/2005	Nanda et al.	
2005/0135295	A1	6/2005	Walton et al.	
2005/0135308	A1	6/2005	Vijayan et al.	
2005/0135318	A1	6/2005	Walton et al.	
2005/0147177	A1	7/2005	Seo et al.	
2005/0152465	A1	7/2005	Maltsev et al.	
2005/0174981	A1	8/2005	Heath et al.	
2005/0185575	A1	8/2005	Hansen et al.	
2005/0195915	A1	9/2005	Raleigh et al.	
2005/0208959	A1	9/2005	Chen et al.	
2005/0220211	A1	10/2005	Shim et al.	
2005/0227628	A1	10/2005	Inanoglu	
2005/0245264	A1	11/2005	Laroia et al.	
2005/0276343	A1	12/2005	Jones	
2006/0002496	A1	1/2006	Wallace et al.	
2006/0018247	A1	1/2006	Driesen et al.	
2006/0018395	A1	1/2006	Tzannes	
2006/0039275	A1	2/2006	Walton et al.	
2006/0067417	A1	3/2006	Park et al.	
2006/0072649	A1	4/2006	Chang et al.	
2006/0077935	A1	4/2006	Hamalainen et al.	
2006/0104196	A1	5/2006	Wu et al.	
2006/0104340	A1	5/2006	Walton et al.	
2006/0114858	A1	6/2006	Walton et al.	
2006/0153237	A1	7/2006	Hwang et al.	
2006/0159120	A1	7/2006	Kim	
2006/0176968	A1	8/2006	Keaney et al.	
2006/0183497	A1	8/2006	Paranchych et al.	
2006/0209894	A1	9/2006	Tzannes et al.	
2006/0209937	A1	9/2006	Tanaka et al.	
2006/0285605	A1	12/2006	Walton et al.	
2007/0086536	A1	4/2007	Ketchum et al.	
2007/0177681	A1	8/2007	Choi et al.	
2007/0274278	A1	11/2007	Choi et al.	
2008/0069015	A1	3/2008	Walton et al.	
2008/0267098	A1	10/2008	Walton et al.	
2008/0267138	A1	10/2008	Walton et al.	
2008/0285488	A1	11/2008	Walton et al.	
2008/0285669	A1	11/2008	Walton et al.	
2008/0285670	A1	11/2008	Walton et al.	
2009/0129454	A1	5/2009	Medvedev et al.	
2009/0161613	A1	6/2009	Kent et al.	
2009/0291642	A1	11/2009	Cozzo et al.	
2010/0067401	A1	3/2010	Medvedev et al.	
2010/0119001	A1	5/2010	Walton et al.	
2010/0142636	A1	6/2010	Heath, Jr. et al.	
2010/0183088	A1	7/2010	Inanoglu	
2010/0208841	A1	8/2010	Walton et al.	
2010/0220825	A1	9/2010	Dubuc et al.	
2010/0260060	A1	10/2010	Abraham et al.	
2010/0271930	A1	10/2010	Tong et al.	
2011/0096751	A1	4/2011	Ma et al.	
2011/0235744	A1	9/2011	Ketchum et al.	
2012/0140664	A1	6/2012	Walton et al.	
2012/0176928	A1	7/2012	Wallace et al.	
2012/0219093	A1	8/2012	Jia et al.	
2013/0040682	A1	2/2013	Chang et al.	
2013/0279614	A1	10/2013	Walton et al.	
2014/0036823	A1	2/2014	Ma et al.	

FOREIGN PATENT DOCUMENTS

CA	2690247		10/2001
CN	1086061		4/1994
CN	1234661		11/1999
CN	1298266	A	6/2001
CN	1308794	A	8/2001
CN	1314037	A	9/2001
CN	1325198		12/2001
CN	1325243	A	12/2001
CN	1339885	A	3/2002
CN	1347609	A	5/2002
CN	1469662		1/2004
CN	1489836	A	4/2004
CN	1537371		10/2004
DE	19951525	A1	6/2001
EP	0755090	A1	1/1997
EP	0762701		3/1997
EP	0772329		5/1997
EP	0805568	A1	11/1997
EP	0869647	A2	10/1998
EP	0895387	A1	2/1999
EP	0929172	A1	7/1999
EP	0951091	A2	10/1999
EP	0991221	A2	4/2000
EP	0993211		4/2000
EP	1061446		12/2000
EP	1075093		2/2001
EP	1087545	A1	3/2001
EP	1117197	A2	7/2001
EP	1126673	A2	8/2001
EP	1133070		9/2001
EP	1137217		9/2001
EP	1143754	A1	10/2001
EP	1170879	A1	1/2002
EP	1175022	A2	1/2002
EP	1182799	A2	2/2002
EP	1185001	A2	3/2002
EP	1185015		3/2002
EP	1185048	A2	3/2002
EP	1207635	A1	5/2002
EP	1207645	A1	5/2002
EP	1223702	A1	7/2002
EP	1241824		9/2002
EP	1265411		12/2002
EP	1315311	A1	5/2003
EP	1379020		1/2004
EP	1387545		2/2004
EP	1416688	A1	5/2004
EP	1447934	A1	8/2004
EP	1556984	A2	7/2005
GB	2300337		10/1996
GB	2373973	A	10/2002

(56) **References Cited**

FOREIGN PATENT DOCUMENTS

JP	1132027		5/1989
JP	03104430		5/1991
JP	06003956		1/1994
JP	6501139	T	1/1994
JP	8274756	A	10/1996
JP	9135230		5/1997
JP	9266466		10/1997
JP	9307526	A	11/1997
JP	09327073		12/1997
JP	9512156		12/1997
JP	10028077		1/1998
JP	10051402	A	2/1998
JP	10084324		3/1998
JP	10209956	A	8/1998
JP	10303794	A	11/1998
JP	10327126		12/1998
JP	1141159		2/1999
JP	11069431	A	3/1999
JP	11074863	A	3/1999
JP	11163823	A	6/1999
JP	11205273		7/1999
JP	11252037	A	9/1999
JP	11317723	A	11/1999
JP	2991167		12/1999
JP	2000068975	A	3/2000
JP	2000078105		3/2000
JP	2000092009	A	3/2000
JP	2001044930	A	2/2001
JP	200186045		3/2001
JP	2001103034	A	4/2001
JP	2001186051	A	7/2001
JP	2001510668	A	7/2001
JP	2001217896		8/2001
JP	2001231074		8/2001
JP	2001237751	A	8/2001
JP	200264879		2/2002
JP	2002504283		2/2002
JP	200277098		3/2002
JP	200277104		3/2002
JP	2002111627		4/2002
JP	2002118534	A	4/2002
JP	2002510932	A	4/2002
JP	2002514033	A	5/2002
JP	2002164814		6/2002
JP	2002176379	A	6/2002
JP	2002204217		7/2002
JP	2002232943	A	8/2002
JP	2003504941		2/2003
JP	2003198442	A	7/2003
JP	2003530010		10/2003
JP	2004266586		9/2004
JP	2004297172		10/2004
JP	2004535694		11/2004
JP	2005519520		6/2005
JP	2006504336	A	2/2006
JP	2006504372		2/2006
JP	4860925		11/2011
KR	200011799		2/2000
KR	20010098861		11/2001
KR	1020020003370		1/2002
KR	20030085040		11/2003
KR	20060095576	A	8/2006
RU	2015281	C1	6/1994
RU	2111619	C1	5/1998
RU	2134489		8/1999
RU	2139633		10/1999
RU	2141168	C1	11/1999
RU	2146418	C1	3/2000
RU	2149509		5/2000
RU	2152132		6/2000
RU	2157592		10/2000
RU	2158479	C2	10/2000
RU	2168277		5/2001
RU	2168278	C2	5/2001
RU	2197781	C2	1/2003
RU	2201034	C2	3/2003
RU	2335852	C2	10/2008
TW	419912		1/2001
TW	496620		7/2002
TW	503347		9/2002
TW	200300636		6/2003
TW	545006	B	8/2003
TW	567689		12/2003
TW	567701		12/2003
TW	583842	B	4/2004
TW	I230525		4/2005
TW	I263449		10/2006
TW	I267251	B	11/2006
WO	8607223		12/1986
WO	9210890	A1	6/1992
WO	9307684	A1	4/1993
WO	9507578		3/1995
WO	WO-9516319	A1	6/1995
WO	9521501	A1	8/1995
WO	9530316	A1	11/1995
WO	9532567	A1	11/1995
WO	96/22662		7/1996
WO	96/35268		11/1996
WO	9702667		1/1997
WO	9719525	A1	5/1997
WO	9736377	A1	10/1997
WO	9809381	A1	3/1998
WO	9809395		3/1998
WO	98/26523		6/1998
WO	9824192	A1	6/1998
WO	98/30047	A1	7/1998
WO	9857472		12/1998
WO	9903224		1/1999
WO	99/14878		3/1999
WO	99/16214		4/1999
WO	9929049	A2	6/1999
WO	9944379	A1	9/1999
WO	9952224	A1	10/1999
WO	9957820		11/1999
WO	0011823	A1	3/2000
WO	0036764	A2	6/2000
WO	0062456	A1	10/2000
WO	0105067	A1	1/2001
WO	0126269	A1	4/2001
WO	0163775	A2	8/2001
WO	0169801		9/2001
WO	0171928	A2	9/2001
WO	0176110	A2	10/2001
WO	0180510	A1	10/2001
WO	0182521	A2	11/2001
WO	0195531	A2	12/2001
WO	0197400		12/2001
WO	0201732	A2	1/2002
WO	0203557	A1	1/2002
WO	WO-0205506		1/2002
WO	0215433	A1	2/2002
WO	0225853	A2	3/2002
WO	02060138		8/2002
WO	02062002	A1	8/2002
WO	02065664	A2	8/2002
WO	02069523	A1	9/2002
WO	02069590	A1	9/2002
WO	02073869	A1	9/2002
WO	02075955	A1	9/2002
WO	02078211	A2	10/2002
WO	02082689	A2	10/2002
WO	02088656		11/2002
WO	02093784	A1	11/2002
WO	02099992		12/2002
WO	03010984	A1	2/2003
WO	03010994	A1	2/2003
WO	03019984	A1	3/2003
WO	03028153		4/2003
WO	03034646	A2	4/2003
WO	03047140	A1	6/2003
WO	03075479	A1	9/2003
WO	04002011		12/2003
WO	04002047		12/2003
WO	2004038985	A2	5/2004

(56) **References Cited**

FOREIGN PATENT DOCUMENTS

WO	2004038986 A2	5/2004
WO	2004039011	5/2004
WO	2004039022	5/2004
WO	2005041515	5/2005
WO	2005043855	5/2005
WO	2005046113 A2	5/2005

OTHER PUBLICATIONS

Editor: 3GPP Draft; 3rd Generation Partnership Project (3GPP), Technical Specification Group (TSG) Radio Access Network (RAN); Working Group 4(WG4); base Station conformance and testing, TS 25.141 V0.1.1 (May 1999), R4-99349, Mobile Competence Centre; 650, Route Des Lucioles; F-06921 Sophia-Antipolis Cedex; France, vol. RAN WG4, no.Miami; Oct. 24, 2001, XP050166323.

EPO Communication pursuant to Article 94(3) EPC issued by the European Patent Orffice for Application No. 10174926.5 dated Aug. 1, 2013.

Lal D et al: "A novel MAC layer protocol for space division multiple access in wireless ad hoc networks", Computer Communications and Networks, 2002 Proceedings, Eleventh International Conference on Oct. 14, 2002, pp. 614-619.

Technical Search Report issued by the Taiwan Patent Office for TW Application No. 098143050, dated Aug. 2, 2013.

3 rd Generation Partnership Project (3GPP); Technical Specification Group (TSG); Radio Access Network (RAN); RF requirements f o r 1.28Mcps UTRA TDD option, 3GPP Standard; 3G TR 25.945, 3rd Generation Partnership Project (3GPP), Mobile Competence Centre ; 650, Route Des Lucioles ; F-06921 Sophia-Antipolis Cedex; France, No. V2.0.0, Dec. 20, 2000, pp. 1-144, XP050400193, [retreived on Dec. 20, 2000], p. 126.

3GPP2 TIA/EIA/IS-2000.2-A, "Physical Layer Standard for cdma2000: Standards for Spread Spectrum Systems," (Mar. 2000), Telecommunications Industry Association, pp. 1-446.

3rd Generation Parthership Project ; Technical Specification Group Radio Access Network; Radio Resource Control (RRC); Protocol Specifiation (Release 5), 3GPP Standard; 3GPP TS 25.331, 3rd Generation Partnership Project (3GPP), Mobile Competence Centre ; 650, Route Des Lucioles ; F-06921 Sophia-Antipolis Cedex; France, No. V5.2.0, Sep. 1, 2002, pp. 1-938, XP050367950, pp. 124, 358—p. 370.

"3rd Generation Partnership Project ; Technical Specification Group Radio Access 6-18, Network; Physical channels and mapping of 21-24 transport channels onto physical channels (TDD) (Release 5)", 3GPP Standard; 3GPP TS 25.221, 3rd Generation Partnership Project (3GPP), Mobile Competence Centre ; 650, Route Des Lucioles ; F-06921 Sophia-Antipolis Cedex ; France, No. V5.2.0, Sep. 1, 2002, pp. 1-97, XP050366967.

Alamouti, S.M., "A Simple Transmit Diversity Technique for Wireless Communications," IEEE Journal on Select Areas in Communications, vol. 16, No. 8, Oct. 1998, pp. 1451-1458.

Bingham J.A.C., "Multicarrier modulation for data transmission: An idea whose time has come," Communications Magazine, IEEE, vol. 28, Issue 5, pp. 5-14 (May 1990).

Catreux S., et al., "Simulation results for an interference-limited multiple input multiple output cellular system"., Global Telecommmunications letters . IEEE: U.S.A. Nov. 2000. vol. 4(11), pp. 334-336.

Chen, K.C. et al., "Novel Space-Time Processing of DS/CDMA Multipath Signal," IEEE 49th, Vehicular Technology Conference, Houston, Texas, May 16-20, 1999, pp. 1809-1813.

Choi, R. et al., "MIMO Transmit Optimization for Wireless Communication Systems," Proceedings of the First IEEE International workshops on Electronic Design, pp. 1-6, Piscataway, New Jersey, Jan. 29-31, 2002.

Chung, J. et al: "Multiple antenna systems for 802.16 systems." IEEE 802.16 Broadband Wireless Access Working Group <http://ieee802.org/I6>, IEEE 802.16abc-01/31, Sep. 7, 2001, pp. 1-5.

Coleri, S. et al: "Channel Estimation Techniques Based on Pilot Arrangement in OFDM Systems," IEEE Transactions on Broadcasting, Sep. 1, 2002, pp. 223-229, vol. 48, No. 3, IEEE Service Center, XP011070267, ISSN: 0018-9316.

Co-pending U.S. Appl. No. US07/624,118, filed Dec. 7, 1990.

Co-pending U.S. Appl. No. US08/118,473, filed Sep. 8, 1993.

Co-pending U.S. Appl. No. 60/421,309, filed Oct. 25, 2002.

Co-pending U.S. Appl. No. 60/421,428, filed Oct. 25, 2002.

Deneire, Luc, et al.: "A Low Complexity ML Channel Estimator for OFDM," Proc IEEE ICC (Jun. 2001), pp. 1461-1465.

Diggavi, S. et al., "Intercarrier interference in MIMO OFDM," IEEE International Conference on Communications, (Aug. 2002), vol. 1, pp. 485-489, doi: 10.1109/ICC.2002.996901.

ETSI TS 101 761-1 v1.3.1, "Broadband Radio Access Networks (BRAN); HIPERLAN Type 2; Data Link Control (DLC) Layer; Part 1: Basic Data Transport Functions," ETSI Standards, European Telecommunications Standards Institute BR (V131), pp. 1-88 (Dec. 2001).

European Search Opinion, for EP Patent Application No. EP08006576, European Patent Office, filed on Nov. 16, 2008.

European Search Report—EP08012143.7, Search Authority—Munich Patent Office, Jan. 19, 2011.

European Search Report—EP09171254, Search Authority—The Hague Patent Office, Sep. 3, 2010.

European Search Report—EP10012069—Search Authority—Hague—Nov. 29, 2011.

European Search Report—EP10173988—Search Authority—Munich—Mar. 15, 2011.

European Search Report—EP10173988, Search Authority—Munich Patent Office, Jan. 14, 2011.

European Search Report—EP10174919—Search Authority—Munich—Apr. 11, 2012.

European Search Report—EP10174926—Search Authority—Munich—May 14, 2012.

European Search Report—EP10175461—Search Authority—Munich—May 4, 2012.

European Search Report—EP10177175—Search Authority—Munich—Jul. 9, 2012.

European Search Report—EP10180147—Search Authority—Munich—Mar. 30, 2012.

European Search Report—EP10180324—Search Authority—Munich—May 10, 2012.

European Search Report—EP11153572—Search Authority—The Hague—Jul. 28, 2011.

European Search Report—EP11162015—Search Authority—Hague—Jul. 11, 2011.

European Search Report—EP11173875—Search Authority—Hague—Oct. 25, 2011.

European Search Report for EP Application No. EP10150225 filed on Feb. 25, 2010.

European Search Report for EP Patent Application No. EP05019630 filed on Nov. 16, 2005.

European Search Report for EP Patent Application No. EP05019631 filed on Nov. 30, 2005.

European Search Report for EP Patent Application No. EP08006576 filed on Jun. 16, 2008.

Fujii, M.: "Pseudo-Orthogonal Multibeam-Time Transmit Diversity for OFDM-CDMA" pp. 222-226 (2002).

G. Bauch, J. Hagenauer, "Smart Versus Dumb Antennas—Capacities and FEC Performance," IEEE Communications Letters, vol. 6, No. 2, pp. 55-57, Feb. 2002.

Gao, J. et al. "On implementation of Bit-Loading Algorithms for OFDM Systems with Multiple-Input Multiple Output," VTC 2002—Fall. 2002 IEEE 56th. Vehicular Technology Conference Proceedings. Vancouver, Canada, (Sep. 24-28, 2002), IEEE Vehicular Technology Conference, pp. 199-203.

Gore, D. A., et al.: "Selecting an optimal set of transmit antennas for a low rank matrix channel," 2000 IEEE International Conference on Acoustics, Speech, and Signal Processing. Proceedings. (ICASSP). Istanbul, Turkey, Jun. 5-9, 2000, New York, NY; IEEE, US, vol. 5 of 6, (Jun. 5, 2000), pp. 2785-2788, XP001035763, abstract.

(56) **References Cited**

OTHER PUBLICATIONS

Grunheid, R. et al., "Adaptive Modulation and Multiple Access for the OFDM Transmission Technique," Wireless Personal Communications 13: May 13, 2000, 2000 Kluwer Academic Publishers, pp. 4-13, XP000894156.

Harada H., et al., "An OFDM-Based Wireless ATM Transmission System Assisted by a Cyclically ExtendedPN Sequence for Future Broad-BandMobile Multimedia Communications", IEEE Transactions on Vehicular Technology, IEEE Service Center, Piscataway, NJ, US, vol. 50, No. 6, Nov. 1, 2001, XP011064321, ISSN: 0018-9545.

Hassibi, B. et al., "High Rate Codes That Are Linear in Space and Time," Lucent Technologies, 2002, pp. 1-55.

Haustein, T. et al.: "Performance of MIMO Systems with Channel Inversion," IEEE 55th Vehicular Technology Conference, Birmingham, Alabama, May 6-9, 2002, pp. 35-39.

Hayashi, K. et al.: "A New Spatio-Temporal Equalization Method Based on Estimated Channel Response," Sep. 2001, IEEE Transactions on Vehicular Technology, vol. 50, No. 5, pp. 1250-1259.

Heath et al., "Multiuser diversity for MIMO wireless systems with linear receivers", Conference Record of the 35th Asilomar Conference on Signals, Systems, & Computers, Nov. 4, 2001, pp. 1194-1199, vol. 2, IEEE, XP010582229, DOI: 10.1109/ACSSC.2001.987680, ISBN: 978-0-7803-7147-7.

Hong, D. K. et al.: "Robust Frequency Offset Estimation for Pilot Symbol Assisted Packet CDMA with MIMO Antenna Systems," IEEE Communications Letters, vol. 6, No. 6, pp. 262-264, XP-001133262 (Jun. 2002).

IEEE Std 802.11a-1999 (Supplement to IEEE Std 801.11-1999) "Part 11: Wireless LAN Medium Access Control (MAC) and Physical Layer (PHY) specifications: High-Speed physical Layer in the 5GHZ Band", pp. 1-90, Sep. 1999.

International Preliminary Exam Report for PCT Application No. PCT-US03-034517, International Search Authority European Patent Office filed on Mar. 14, 2005.

International Preliminary Exam Report for PCT Application No. PCT-US2003-034568, International Search Authority, European Patent Office filed on Nov. 24, 2006.

International Preliminary Examination Report—PCT/US03/034519, IPEA/US—Aug. 31, 2004.

International Preliminary Examination Report for Application No. PCT-US03 026395, IPEA-US filed on Dec. 20, 2004.

International Preliminary Examination Report for PCT Application No. PCT-US03-033905, filed on Oct. 18, 2004.

International Preliminary Examination Report for PCT Application No. PCT-US03-034567, International Preliminary Examining Authority, United States, filed on Apr. 17, 2006.

International Preliminary Examination Report for PCT application No. PCT-US03-034570. IPEA-US filed on Feb. 16, 2007.

International Preliminary Examination Report on Patentability for Application No. PCT-US2004-038198, International Preliminary Examining Authority filed on Feb. 18, 2006.

International Preliminary Report on Patentability for PCT Application No. PCT-US03-034565, International Preliminary Examining Authority, Alexandria, VA, USA, filed on Sep. 15, 2008.

International Preliminary Report on Patentability for PCT Application No. PCT-US06-003203 The International Bureau of WIPO, Geneva, Switzerland filed on Jul. 31, 2007.

International Preliminary Report on Patentability-PCT/US06/023515—The International Bureau of WIPO—Geneva, Switzerland, Dec. 17, 2007.

International Search Report—PCT/US2003/034520—International Search Authority, European Patent Office, Jun. 11, 2004.

International Search Report—PCT/US2003/34517, International Search Authority, European Patent Office, Apr. 27, 2004.

International Search Report and Written Opinion—PCT/US2006/017992, International Search Authority—European Patent Office—Aug. 24, 2007.

International Search Report for PCT Application No. PCT-US03-033905, International Search Authority European Patent Office filed on Jun. 2, 2004.

International Search Report for PCT Application No. PCT-US03-034515 International Search Authority European Patent Office filed on Jun. 17, 2004.

International Search Report for PCT Application No. PCT-US03-034567, International Search Authority, European Patent Office filed on Apr. 27, 2004.

International Search Report for PCT Application No. PCT-US06-003203, International Search Authority, European Patent Office filed on Aug. 29, 2006.

International Search Report for PCT Application No. PCT-US2003-034514 , International Search Authority , European Patent Office filed on May 12, 2005.

International Search Report for PCT Application No. PCT-US2004-038198,International Search Authority, European Patent Office filed on Apr. 4, 2005.

International Search Report PCT Application No. PCT-US03-033907, International Search Authority, European Patent Office, filed on Aug. 23, 2004.

International Search Report PCT Application No. PCT-US03-034565, International Search Authority, European Patent Office, filed on Jun. 4, 2004.

International Search Report PCT Application No. PCT-US03-034568, International Search Authority, European Patent Office filed on Jun. 4, 2004.

International Search Report PCT Application No. PCT-US03-034570, International Search Authority, European Patent Office, filed on Jun. 17, 2004.

International Search Report PCT-US03-026395, International Search Authority, Euoropean Patent Office Dec. 19, 2003.

International Search Report, PCT/US03/034519—International Search Authority—European Patent Office—Jul. 8, 2004.

International Search Report—PCT/US04/008665, International Search Authority—European Patent Office—Oct. 6, 2004.

International Search Report—PCT/US06/23515—International Search Authority/US, Dec. 18, 2006.

Iserte, P., et al., "Joint beamforming strategies in OFDM-MIMO systems," Acoustics, Speech, and Signal Processing, 1993. ICASSP-93., 1993 IEEE International Conference on , vol. 3, sections 2-3, Apr. 27-30, 1993, doi: 10.1109/ICASSP.2002.1005279.

Joham, M. et al.: "Symbol Rate Processing for the Downlink of DS-CDMA Systems", IEEE Journal on Selected Areas in Communications, vol. 19, No. 1, paragraphs 1, 2; IEEE Service Center, Piscataway, US, Jan. 1, 2001, XP011055296, ISSN: 0733-8716.

Jongren, G. et al.: "Utilizing Quantized Feedback Information in Orthogonal Space-Time Block Coding," 2000 IEEE Global Telecommunications Conference, 2(4): 995-999, Nov. 27, 2000.

Kiessling, M. et al., "Short-term and long-term diagonalization of correlated MIMO channels with adaptive modulation" IEEE International Symposium on Personal, Indoor and Mobile Radio Communications, vol. 2, Sep. 15, 2002, pp. 593-597.

Kousa M, et al., "Multichannel Adaptive System", IEEE Proceedings I. Solid-State & Electron Devices, Institution of Electrical Engineers. Stevenage, GB, vol. 140, No. 5, Part 1, Oct. 1, 1993, pp. 357-364, XP000403498, ISSN: 0956-3776.

Le Goff, S. et al: "Turbo-codes and high spectral efficiency modulation," IEEE International Conference on Communications, 1994. ICC ''94, SUPERCOMM/ICC ''94, Conference Record, 'Serving Humanity Through Communications.' pp. 645-649, vol. 2, May 1-5, 1994, XP010126658, doi: 10.1109/ICC.1994.368804.

Lebrun G., et al., "MIMO transmission over a time varying TDD channel using SVD," Electronics Letters, 2001, vol. 37, pp. 1363-1364.

Li, Lihua, et al., "A practical space-frequency block coded OFDM scheme for fast fading broadband channels," 2002. The 13th IEEE International Symposium on Personal, Indoor and Mobile Radio communications, vol. 1, Sep. 15-18, 2002.pp. 212-216 vol. 1.

Li, Ye et. al., "Simplified Channel Estimation for OFDM Systems with Multiple Transmit Antennas," IEEE Transactions on Wireless Communications, Jan. 2002, vol. 1, No. 1, pp. 67-75.

Louvigne J.C., et al., "Experimental study of a real-time calibration procedure of a CDMA/TDD multiple antenna terminal," IEEE Antennas and Propagation Society International Symposium, 2002

(56) **References Cited**

OTHER PUBLICATIONS

Digest.APS.San Antonio, TX, Jun. 16-21, 2002,vol. 2, Jun. 16, 2002, pp. 644-647, XP010591780, DOI: 10.1109/APS.2002.1016729, ISBN: 978-0-7803-7330-3.

Miyashita, K. et al: "High data-rate transmission with eigenbeam-space division multiplexing (E-SDM) in a MIMO channel," VTC 2002-Fall. 2002 IEEE 56th. Vehicular Technology Conference Proceedings. Vancouver, Canada, Sep. 24-28, 2002, IEEE Vehicular Technology Conference, New York, NY: IEEE, US, vol. vol. 1 of 4. Conf. 56, (Sep. 24, 2002), pp. 1302-1306, XP010608639.

Nogueroles R., et al., "Performance of a random OFDMA system for mobile communications", Broadband Communications, 1998. Accessing, Transmission, Networking. Proceedings. 1998 International Zurich Seminar on Zurich, Switzerland Feb. 17-19, 1998, New York , NY, USA , IEEE, US, Feb. 17, 1998, pp. 37-43, XP010277032 , DOI : 10.1109/IZSBC.1998.670242 ISBN: 978-0-7803-3893-7, p. 1-p. 2.

Partial European Search Report—EP10012069—Search Authority—The Hague—Nov. 29, 2011.

Partial European Search Report—EP10012070—Search Authority—The Hague—Nov. 29, 2011.

Partial European Search Report—EP111523572—Search Authority—Hague—Jul. 28, 2011.

Partial European Search Report—EP11173875—Search Authority—Hague—Aug. 18, 2011.

Pautler, J. et al.: "On Application of Multiple-Input Multiple-Output Antennas to CDMA Cellular Systems," IEEE 54th Vehicular Technology Conference Proceedings, Atlantic City, New Jersey, Oct. 7-11, 2001, pp. 1508-1512.

Sakaguchi et al, "Comprehensive Calibration for MIMO System", International Symposium on Wireless Personal Multimedia Communications, IEEE, vol. 2, Oct. 27, 2002, pp. 440-443.

Sampath et al., "A Fourth-Generation MIMO-OFDM Broadband Wireless System: Design, Performance and Field Trial Results", IEEE Communications Magazine, Sep. 1, 2002, pp. 143-149, vol. 40, No. 9, IEEE Service Center, XP011092922, ISSN: 0163-6804, DOI: 10.1109/MCOM.2002.1031841.

Sampath, H., et al., "Joint transmit and receive optimization for high data rate wireless communication using multiple antennas," Signals, Systems, and Computers, 1999. Conference Record of the Thirty-Third Asilomar Conference, Oct. 24, 1999, XP010373976, pp. 215-219, IEEE, Piscataway, NJ, US.

Singapore Search Report—SG20104266-1—Hungary Intellectual Patent Office—Sep. 8, 2011.

Song, Bong-Gee et al., "Prefilter design using the singular value decomposition for MIMO equalization," 1996 Conference Record of the Thirtieth Asilomar Conference on Signals, Systems and Computers, vol. 1, pp. 34-38, Nov. 3-6, 1996, XP010231388, DOI : 10.1109/ACSSC.1996.600812, p. 35, col. 2, paragraph 4 through p. 36, col. 1.

Supplementary European Search Report—EP06759443—Search Authority—Hague—Nov. 24, 2011.

Supplementary European Search Report—EP06785006, Search Authority—The Hague Patent Office, Jul. 13, 2011.

Taiwan Search Report—TW093135893—TIPO—Jul. 6, 2011.

Taiwan Search Report—TW095103565—TIPO—Jan. 12, 2012.

Taiwan Search Repor—TW095121422—TIPO—May 20, 2011.

Taiwanese Search report—TW092129777—TIPO—Mar. 6, 2010.

Taiwanese Search Report for Application No. 092129800, TIPO, filed on Apr. 6, 2010.

Taiwanese Search Report for Application No. 092129820 TIPO filed on Apr. 16, 2010.

Taiwanese Search Report for Application No. 092129817, TIPO filed on Oct. 31, 2010.

Tarighat, A. et al. "Performance Analysis of Different Algorithms for cdma2000 Antenna Array System and a New Multi User Beamforming (MUB) Algorithm", Wireless Communications and Networking Conference, vol. 1, pp. 409-414, Sep. 23, 2000.

The Authoritative Dictionary of IEEE Standards Terms, Seventh Edition, IEEE Press: New York (Dec. 2000), p. 902.

Theon, S. et al.: "Improved Adaptive Downlink for OFDM/SDMA-Based Wireless Networks," IEEE VTS 53rd Vehicular Technology Conference, pp. 707-711, Rhodes, Greece, May 6-9, 2001.

Tujkovic, D.: "High bandwidth efficiency space-time turbo coded modulation", Institute of Electrical and Electronics Engineers, ICC 2001. 2001 IEEE International Conference on Communications, Conference Record, pp. 1104-1109, Helsinki, Finland, Jun. 11-14, 2001.

Van Zelst, A. et al.: "Space Division Multiplexing (SDM) for OFDM Systems," IEEE 51st Vehicular Technology Conference Proceedings, pp. 1070-1074, Tokyo, Japan, May 15-18, 2000.

Varanasi M.K, et al., "Optimum decision feedback multiuser equalization with successive decoding achieves the total capacity of the Gaussian multiple-access channel", Signals, Systems & Computers, 1997. Conference Record of the Thirty-First Asilomar Conference on Pacific Grove, CA, USA Nov. 2-5, 1997, Los Alamitos, CA, USA,IEEE Comput. Soc, US, vol. 2, Nov. 2, 1997, pp. 1405-1409 , XP010280667, DOI: 10.1109/ACSSC.1997 . 679134 ISBN : 978-0-8186-8316-9 pp. 1,3,5; figures 1,3.

Vook, F. W. et al., "Adaptive antennas for OFDM", Vehicular Technology Conference, vol. 1, May 18-21, 1998, pp. 606-610, XP010287858, New York, NY, USA, IEEE, US DOI: 10.1109/VETEC.1998.686646 ISBN: 978-0-7803-4320-7.

Wales, S.W. "A mimo technique within the UTRA TDD standard," MIMO: Communications Systems from Concept to Implementations (Ref. No. 2001/175), IEE Seminar on, (Dec. 12, 2001), pp. 1-8., London, UK.

Warner, W. et al.: "OFDM/FM Frame Synchronization for Mobile Radio Data Communication", IEEE Transactions on Vehicular Technology, Aug. 1993, vol. 42, No. 3, pp. 302-313.

Wolniansky P.W., et al., "V-BLAST: An architecture for realizing very high data rates over the rich-scattering wireless channel," Signals, Systems, and Electronics, 1998. ISSSE 98. 1998 URSI International Symposium, pp. 295-300, (Sep. 29-Oct. 2, 1998), doi: 10.1109/ISSSE.1998.738086.

Wong, et al., "Multiuser OFDM With Adaptive Subcarrier, Bit, and Power Allocation," Oct. 1999, IEEE Journal on Selected Areas in Communications, vol. 17, No. 10, pp. 1747-1758.

Wong K. K., et al., "Optimizing time and space MIMO antenna system for frequency selective fading channels," IEEE Journal on Selected Areas in Communications, vol. 19, No. 7, Jul. 2001, Sections II and III and V, 1396, pp. 1395-1407.

Written Opinion for PCT Application for No. PCT-US06-003203, International Search Authority, European Patent Office filed on Aug. 29, 2006.

Written Opinion for PCT Application No. PCT-US03-034570, IPEA-US filed on Aug. 11, 2006.

Written Opinion for PCT Application No. PCT-US2004 038198, International Search Authority, European Patent Office filed on Apr. 4, 2005.

Written Opinion-PCT/US04/008665, International Search Authority—European Patent Office Oct. 6, 2004.

Written Opinion—PCT/US06/23515—International Search Authority/US, Dec. 18, 2006.

Wyglinski, Alexander. "Physical Layer Loading Algorithms for Indoor Wireless Multicarrier Systems," Thesis Paper, McGill University, Montreal, Canada, Nov. 2004, p. 109.

Yamamura, T et al., "High Mobility OFDM transmission system by a new channel estimation and ISI cancellation scheme using characteristics of pilot symbol inserted OFDM signal"., Vehicular Technology Conference, vol. 1, Sep. 19, 1999-Sep. 22, 1999, pp. 319-323, XP010352958 IEEE, Piscataway, NJ, USA, ISBN: 0-7803-5435-4.

Yoshiki, T., et al., "A Study on Subcarrier Adaptive Demodulation System using Multilevel Transmission Power Control for OFDM/FDD System," The Institute of Electronics, Information and Communications Engineers general meeting, lecture collection, Japan, Mar. 7, 2000, Communication 1, p. 400.

* cited by examiner

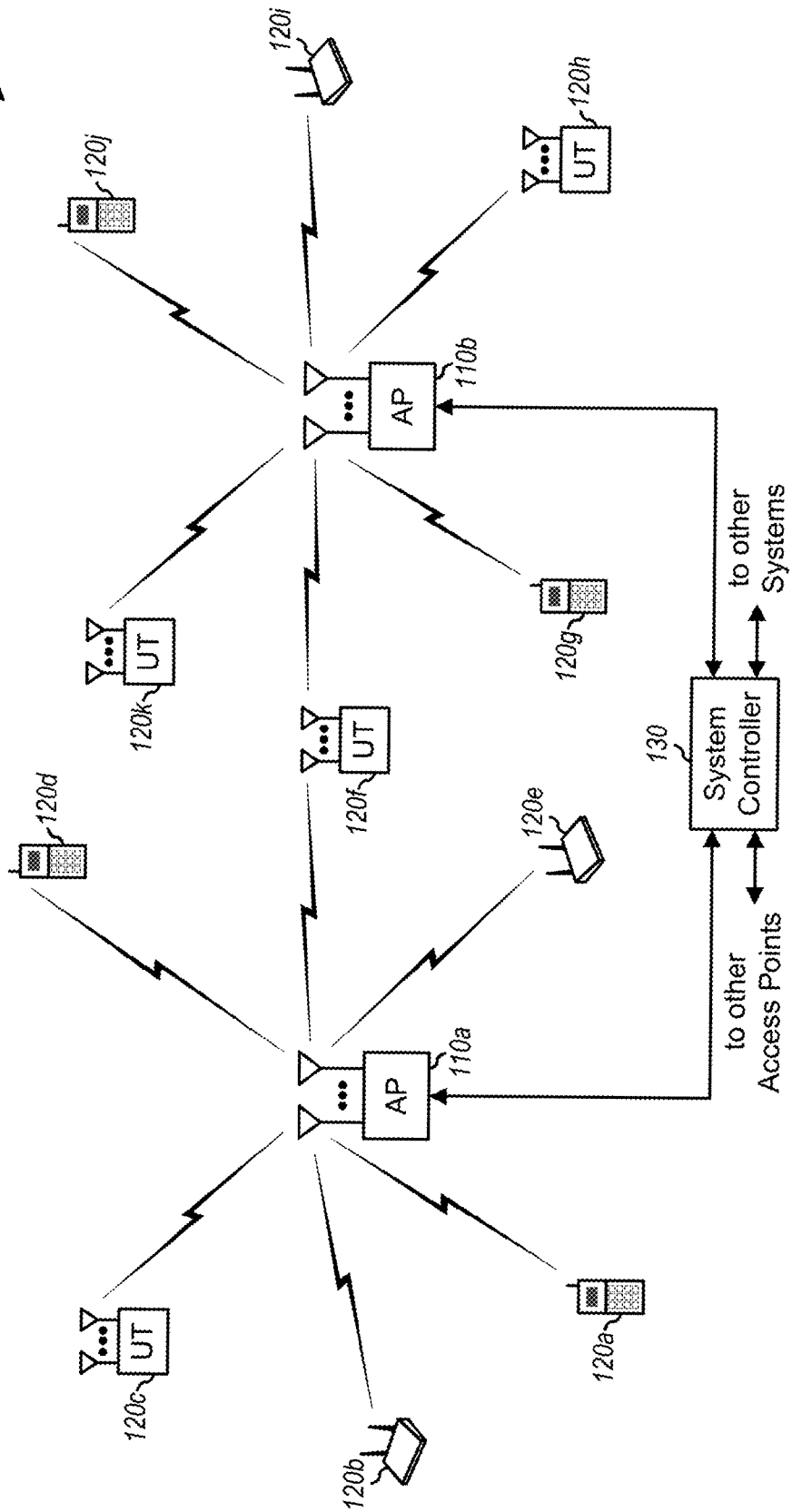
100
120i
120h
UT
120j
AP
110b
120g
UT
120k
UT
120f
120d
120e
130
System Controller
to other Systems
to other Access Points
AP
110a
120c
UT
120b
120a

FIG. 1

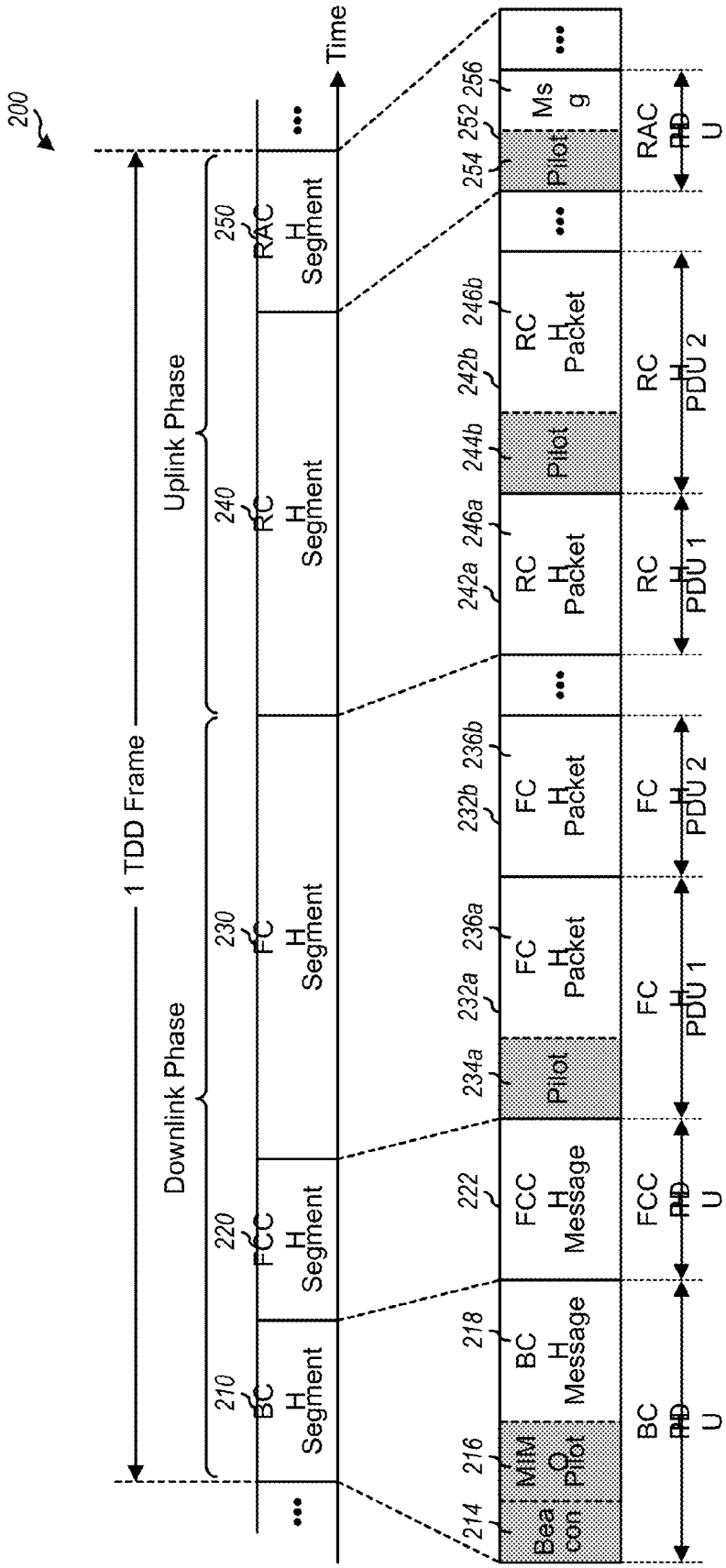
200
Time
1 TDD Frame
Downlink Phase
Uplink Phase
210 BCH Segment
220 FCCH Segment
230 FCH Segment
240 RCH Segment
250 RACH Segment
214 Beacon
216 MIMO Pilot
218 BCH Message
222 FCCH Message
232a FCH Packet
234a Pilot
236a FCH Packet
232b FCH Packet
236b FCH Packet
242a RCH Packet
244a Pilot
246a RCH Packet
242b RCH Packet
244b Pilot
246b RCH Packet
254 Pilot
256 Msg
BCH PDU
FCCH PDU
FCH PDU 1
FCH PDU 2
RCH PDU 1
RCH PDU 2
RACH PDU

FIG. 2

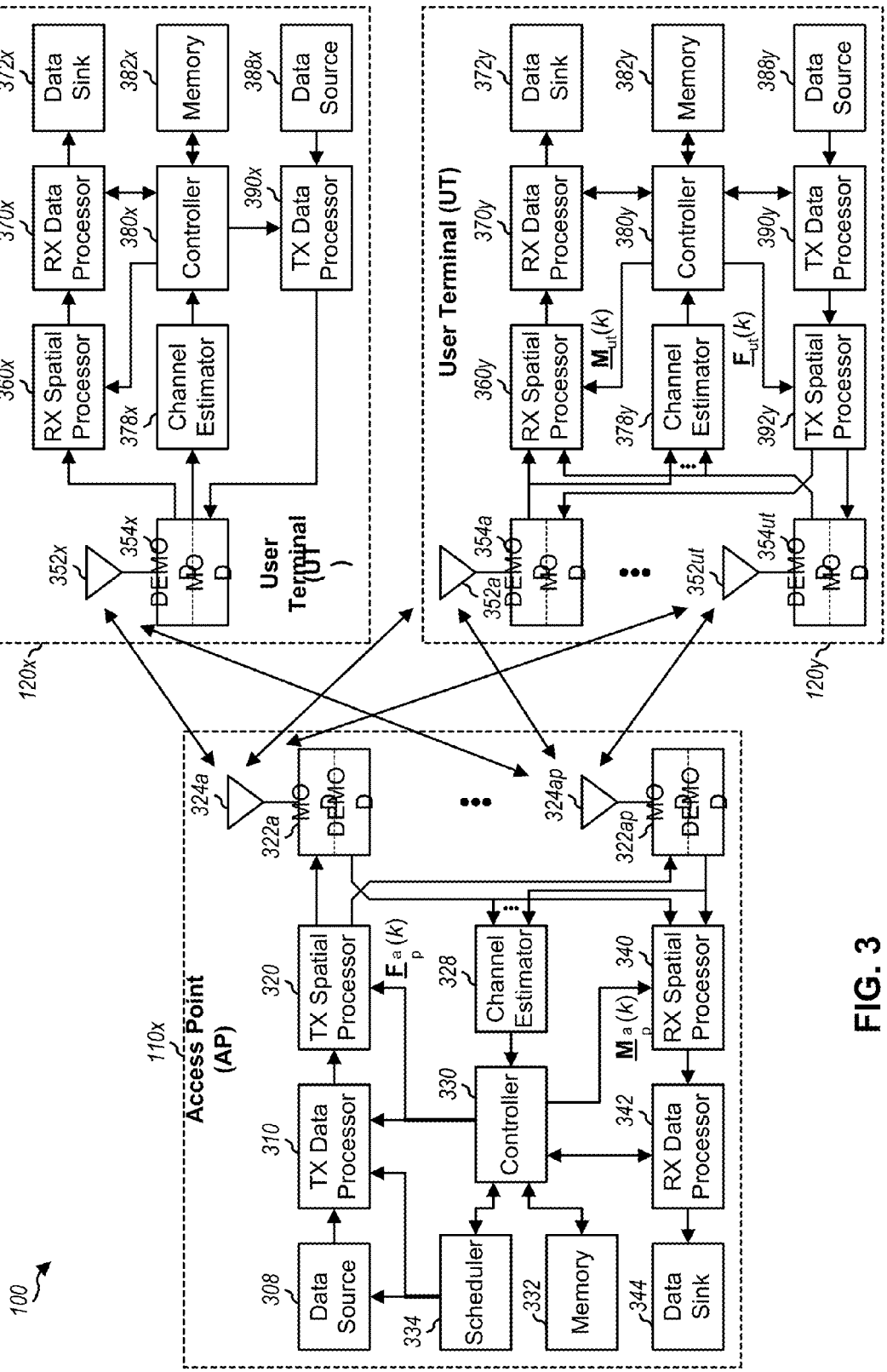
100
Access Point (AP)
110x
User Terminal (UT)
120x
120y
Data Source
Data Sink
Memory
Scheduler
Controller
Channel Estimator
TX Data Processor
RX Data Processor
TX Spatial Processor
RX Spatial Processor
DEMOD
MOD

FIG. 3

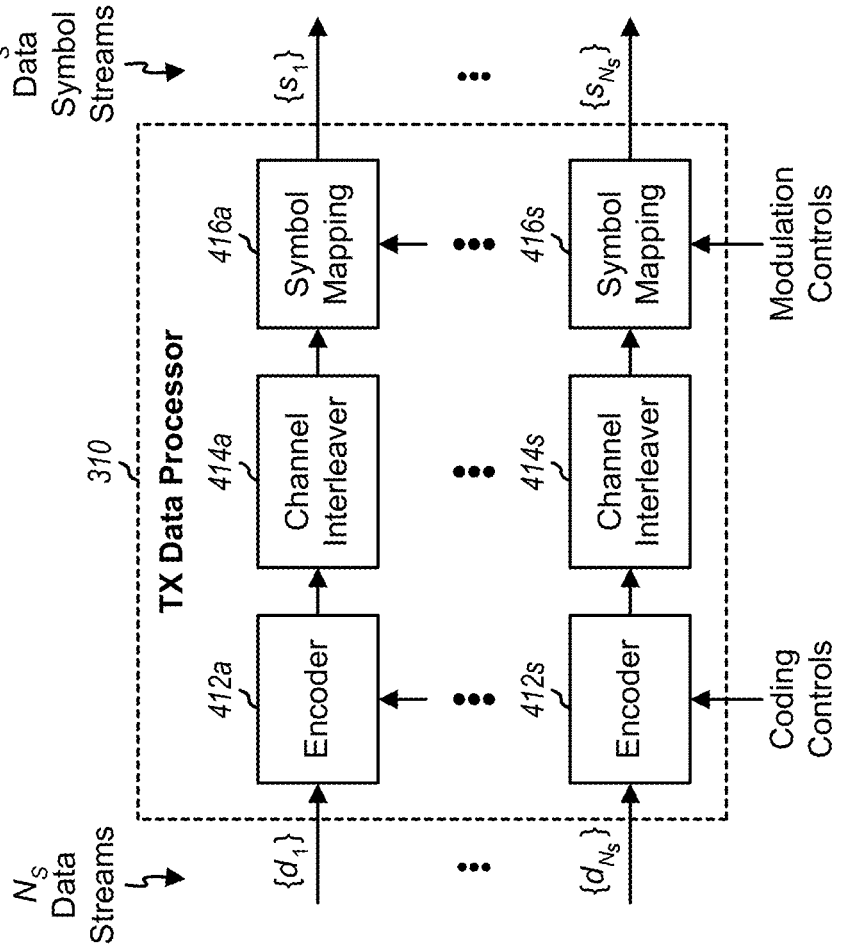
N_S Data Symbol Streams
TX Data Processor
310
412a
Encoder
414a
Channel Interleaver
416a
Symbol Mapping
412s
Encoder
414s
Channel Interleaver
416s
Symbol Mapping
Modulation Controls
Coding Controls
N_S Data Streams
$\{d_1\}$
$\{d_{N_S}\}$
$\{s_1\}$
$\{s_{N_S}\}$

FIG. 4

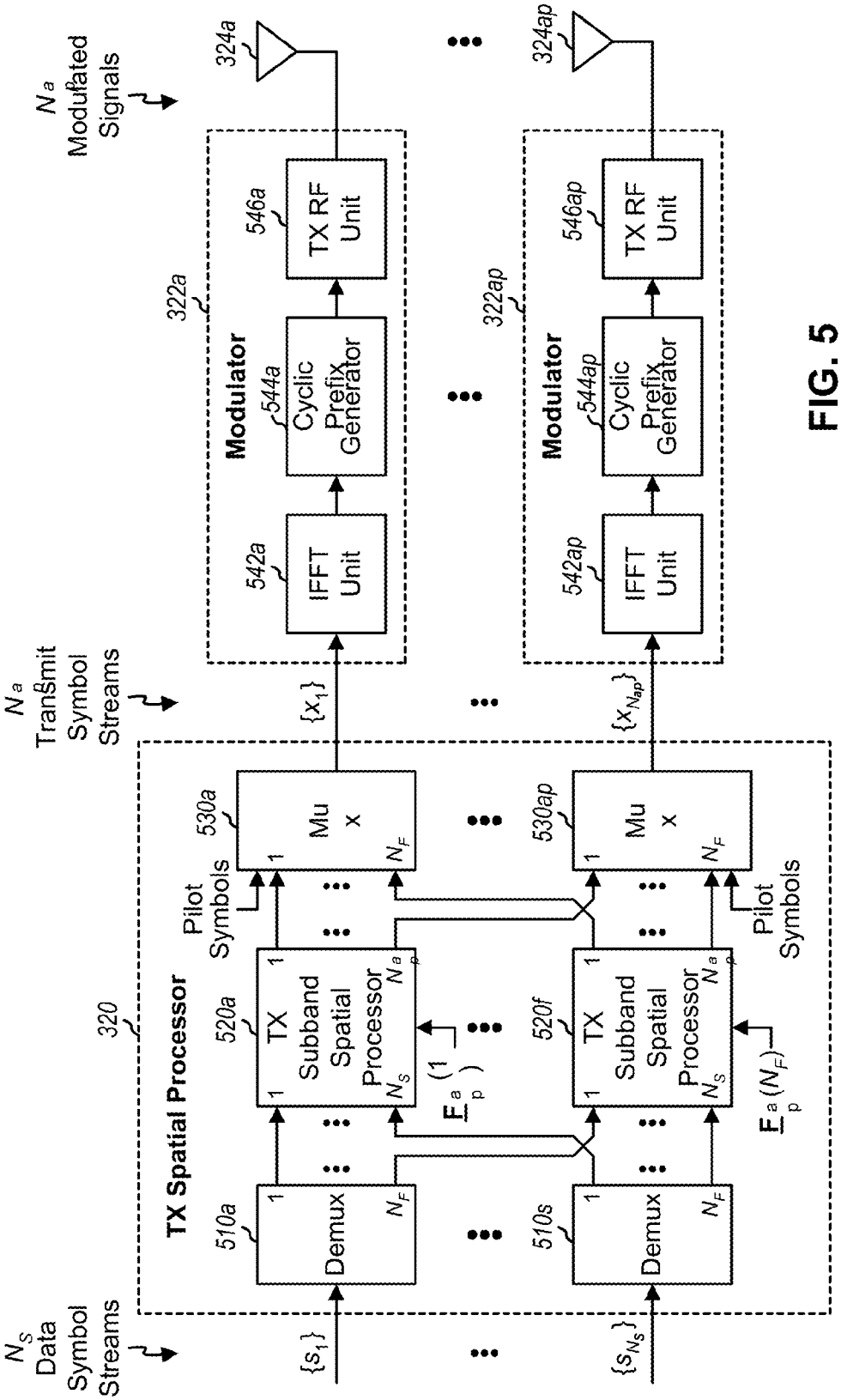
N_a Modulated Signals
324a
324ap
N_a Transmit Symbol Streams
322a
322ap
Modulator
546a
546ap
TX RF Unit
544a
544ap
Cyclic Prefix Generator
542a
542ap
IFFT Unit
$\{x_1\}$
$\{x_{N_{ap}}\}$
320
TX Spatial Processor
530a
530ap
Mux
Pilot Symbols
520a
520f
TX Subband Spatial Processor
N_S
N_a
$\underline{F}_p^a(1)$
$\underline{F}_p^a(N_F)$
510a
510s
Demux
N_F
N_S Data Symbol Streams
$\{s_1\}$
$\{s_{N_S}\}$

FIG. 5

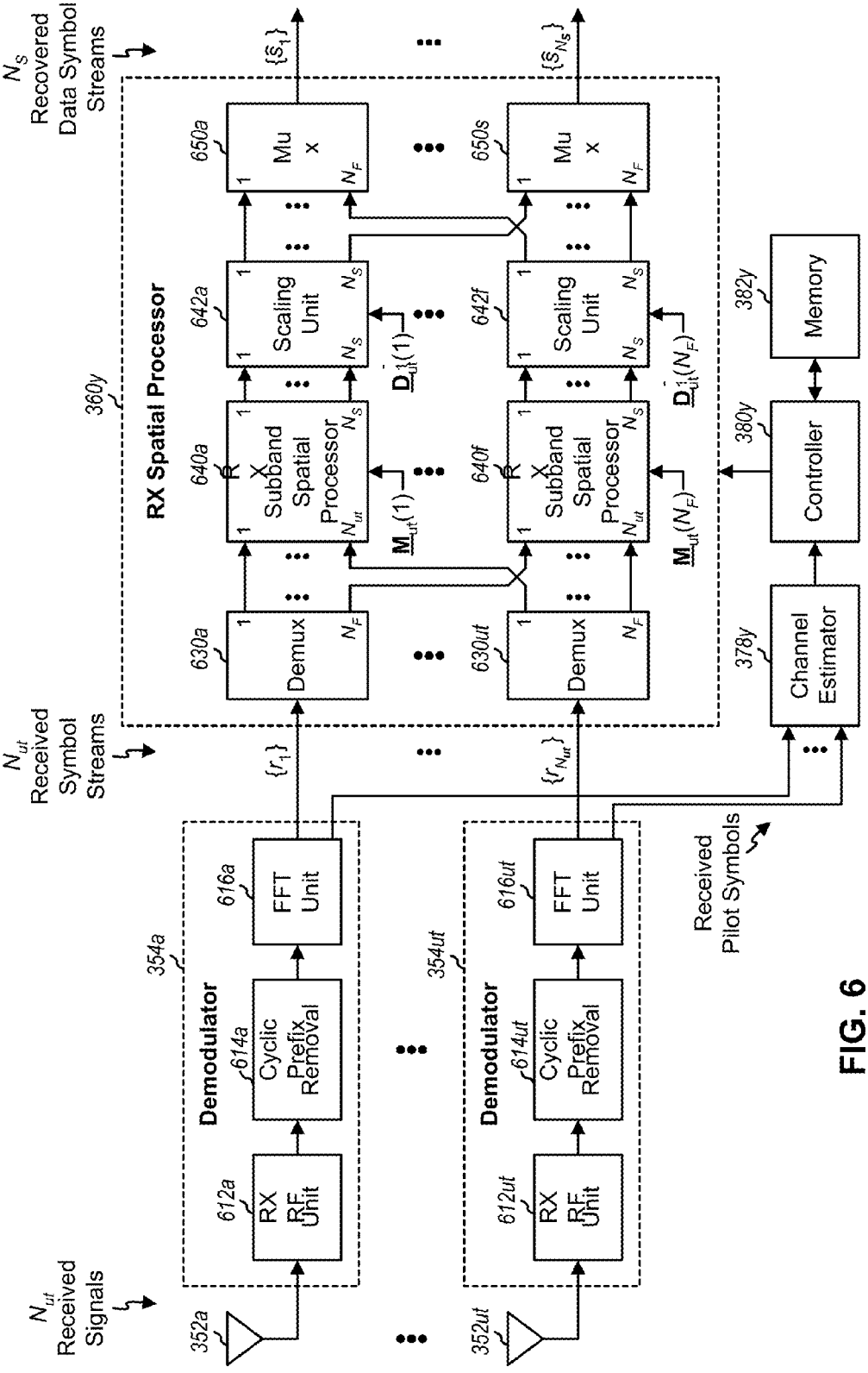
N_{ut} Received Signals
352a
352ut
612a
612ut
RX RF Unit
614a
614ut
Cyclic Prefix Removal
616a
616ut
FFT Unit
354a
354ut
Demodulator
N_{ut} Received Symbol Streams
$\{r_1\}$
$\{r_{N_{ut}}\}$
360y
RX Spatial Processor
630a
630ut
Demux
640a
640f
Subband Spatial Processor
642a
642f
Scaling Unit
650a
650s
Mu x
N_S Recovered Data Symbol Streams
$\{\hat{s}_1\}$
$\{\hat{s}_{N_S}\}$
$\underline{M}_{ut}(1)$
$\underline{M}_{ut}(N_F)$
$\underline{D}_{ut}(1)$
$\underline{D}_{ut}(N_F)$
Received Pilot Symbols
378y
Channel Estimator
380y
Controller
382y
Memory

FIG. 6

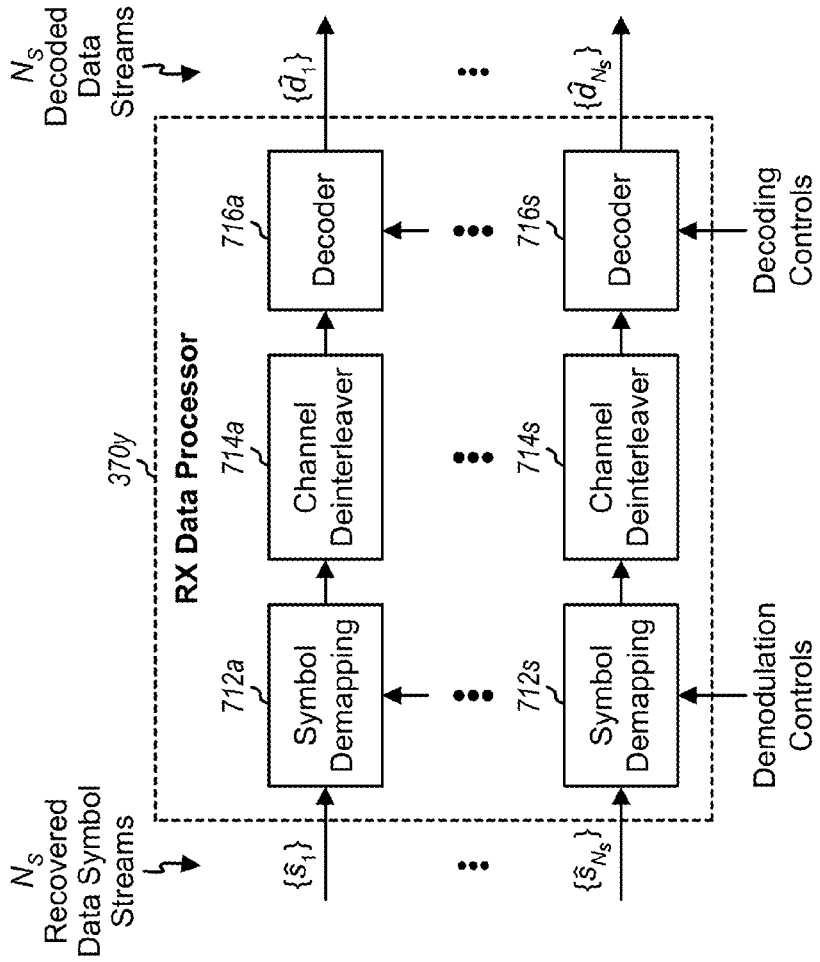
N_S Recovered Data Symbol Streams
N_S Decoded Data Streams
370y
RX Data Processor
712a
Symbol Demapping
712s
Symbol Demapping
714a
Channel Deinterleaver
714s
Channel Deinterleaver
716a
Decoder
716s
Decoder
$\{\hat{s}_1\}$
$\{\hat{s}_{N_S}\}$
$\{\hat{d}_1\}$
$\{\hat{d}_{N_S}\}$
Demodulation Controls
Decoding Controls

FIG. 7

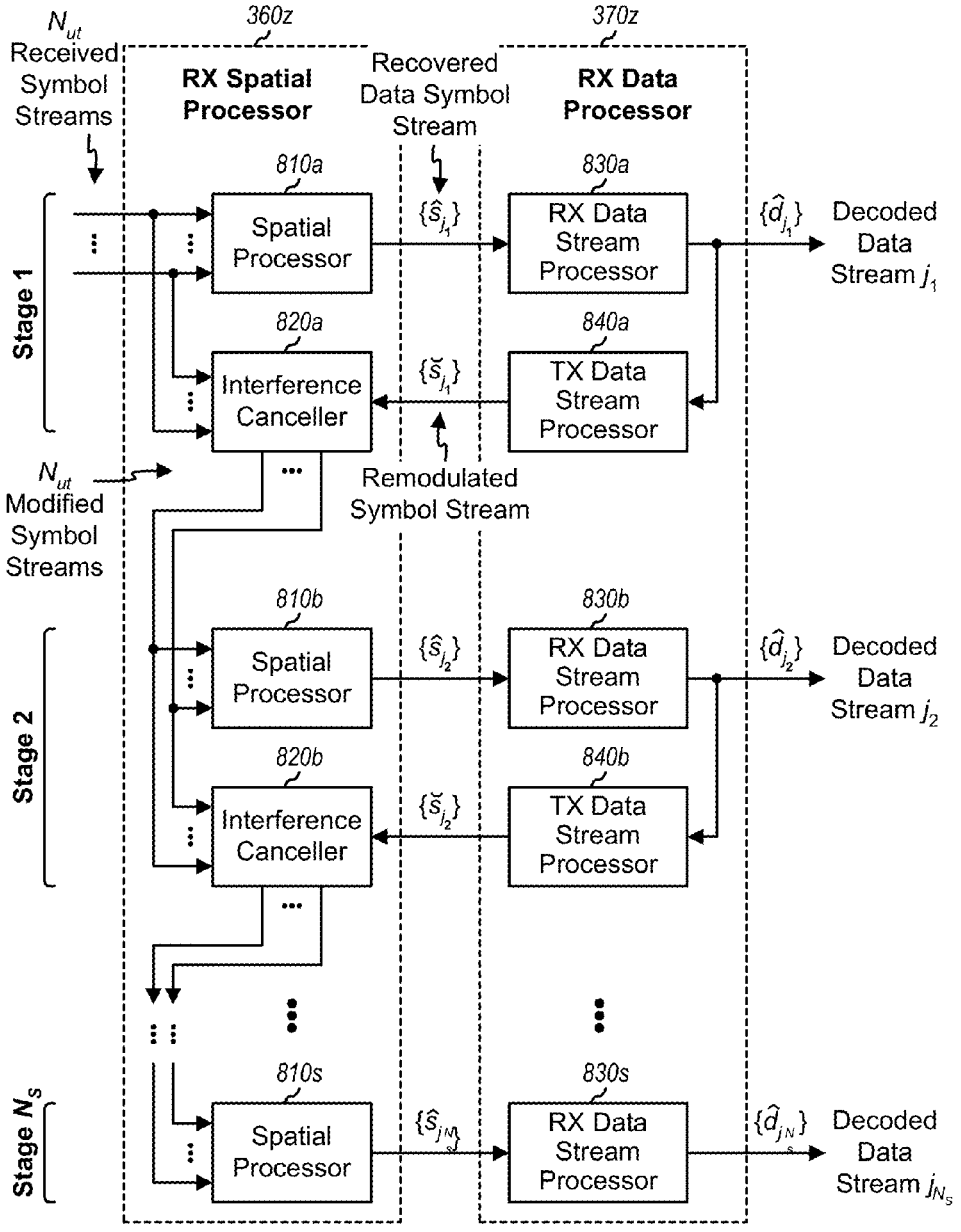
N_{ut} Received Symbol Streams
360z
370z
RX Spatial Processor
Recovered Data Symbol Stream
RX Data Processor
810a
Spatial Processor
$\{\hat{s}_{j_1}\}$
830a
RX Data Stream Processor
$\{\hat{d}_{j_1}\}$
Decoded Data Stream j_1
Stage 1
820a
Interference Canceller
$\{\tilde{s}_{j_1}\}$
840a
TX Data Stream Processor
N_{ut} Modified Symbol Streams
Remodulated Symbol Stream
810b
Spatial Processor
$\{\hat{s}_{j_2}\}$
830b
RX Data Stream Processor
$\{\hat{d}_{j_2}\}$
Decoded Data Stream j_2
Stage 2
820b
Interference Canceller
$\{\tilde{s}_{j_2}\}$
840b
TX Data Stream Processor
Stage N_s
810s
Spatial Processor
$\{\hat{s}_{j_{N_s}}\}$
830s
RX Data Stream Processor
$\{\hat{d}_{j_{N_s}}\}$
Decoded Data Stream j_{N_s}

FIG. 8

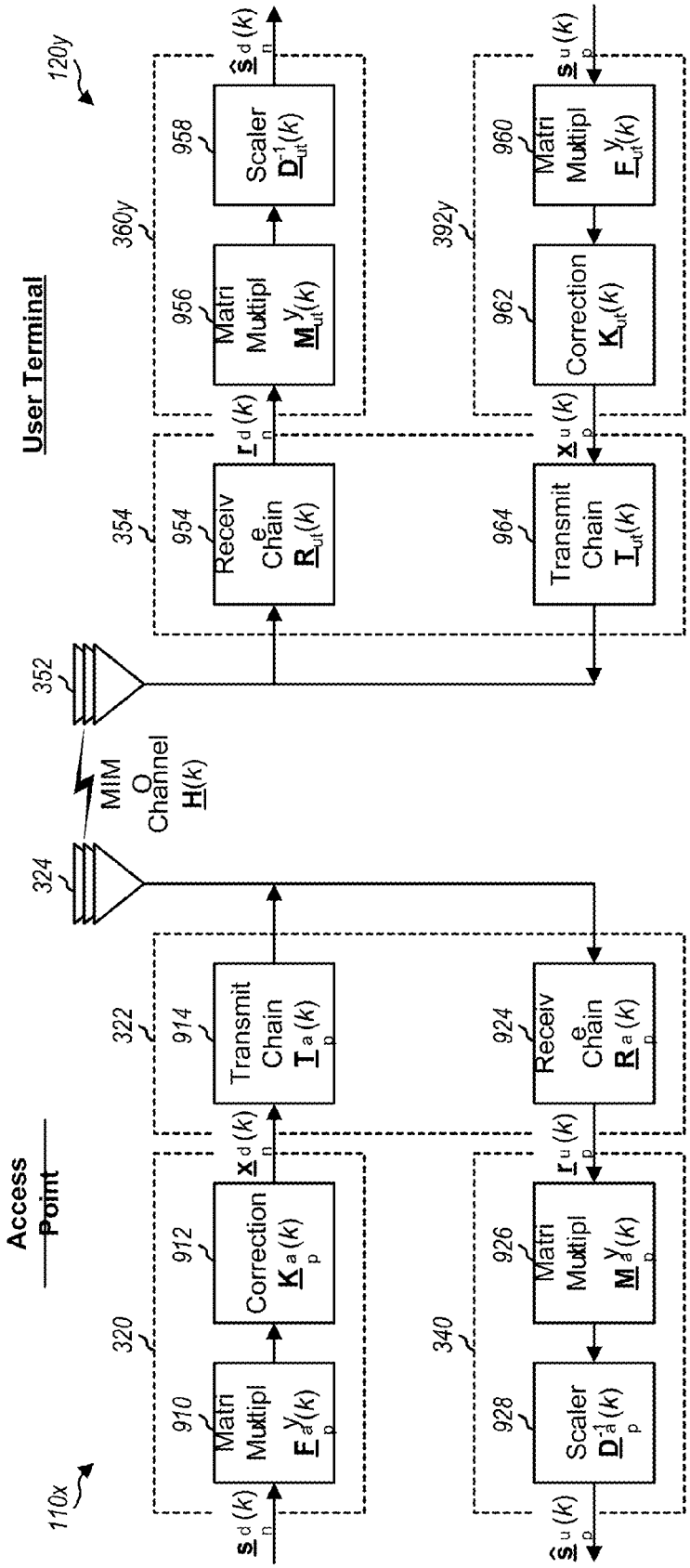

Access Point
User Terminal
110x
120y
320
322
324
340
352
354
360y
392y
910
912
914
924
926
928
954
956
958
960
962
964
Matri Multipl
Correction
Transmit Chain
Receive Chain
Scaler
MIMO Channel

FIG. 9

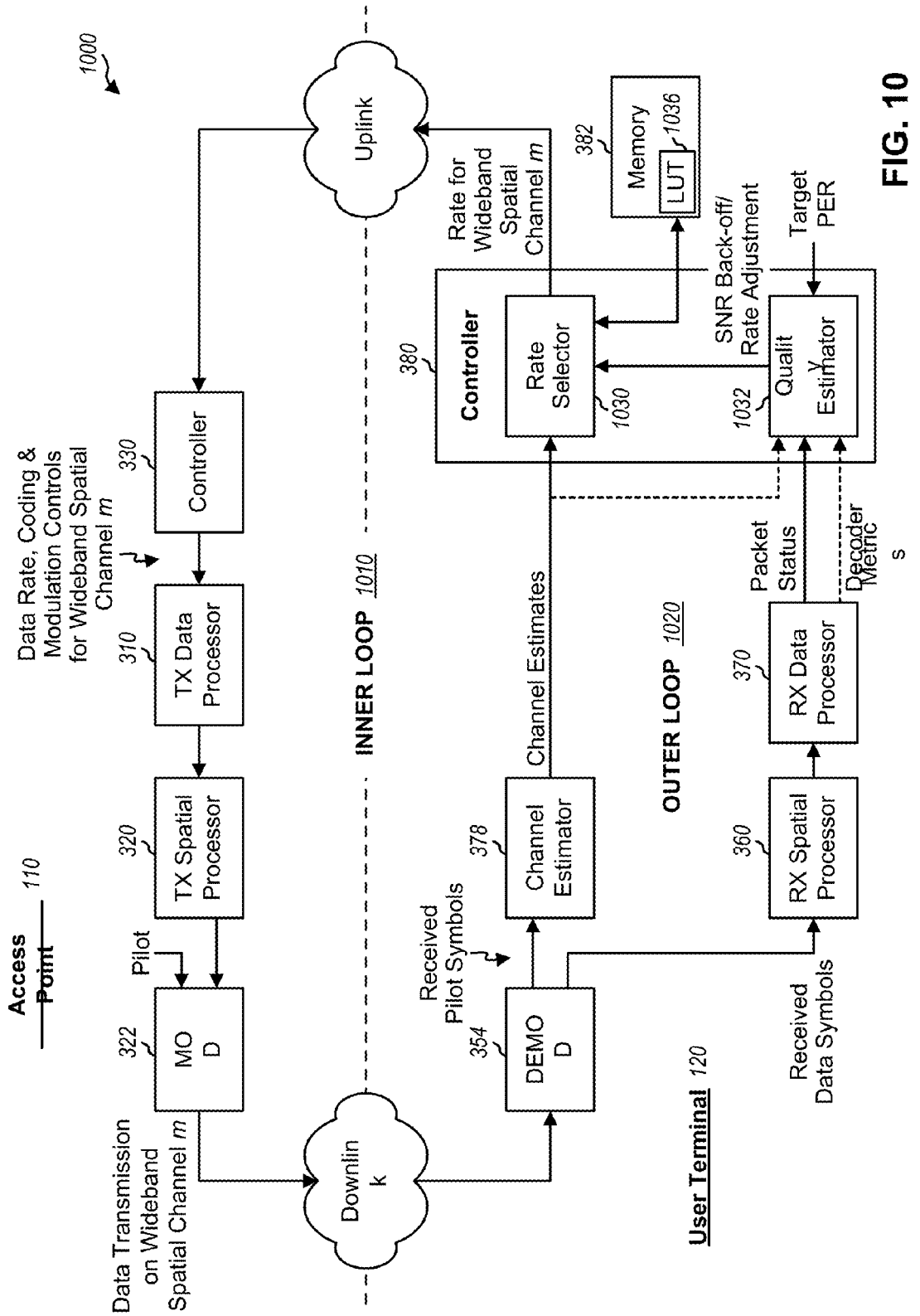
1000
Uplink
Downlink
Access Point 110
User Terminal 120
INNER LOOP 1010
OUTER LOOP 1020
Controller 330
TX Data Processor 310
TX Spatial Processor 320
MO D 322
Pilot
Data Rate, Coding & Modulation Controls for Wideband Spatial Channel m
Data Transmission on Wideband Spatial Channel m
Controller 380
Rate Selector 1030
Rate for Wideband Spatial Channel m
Memory 382
LUT 1036
SNR Back-off/ Rate Adjustment
Target PER
Qualit Y Estimator 1032
Channel Estimates
Channel Estimator 378
DEMO D 354
Received Pilot Symbols
Received Data Symbols
RX Spatial Processor 360
RX Data Processor 370
Packet Status
Decoder Metric s

FIG. 10

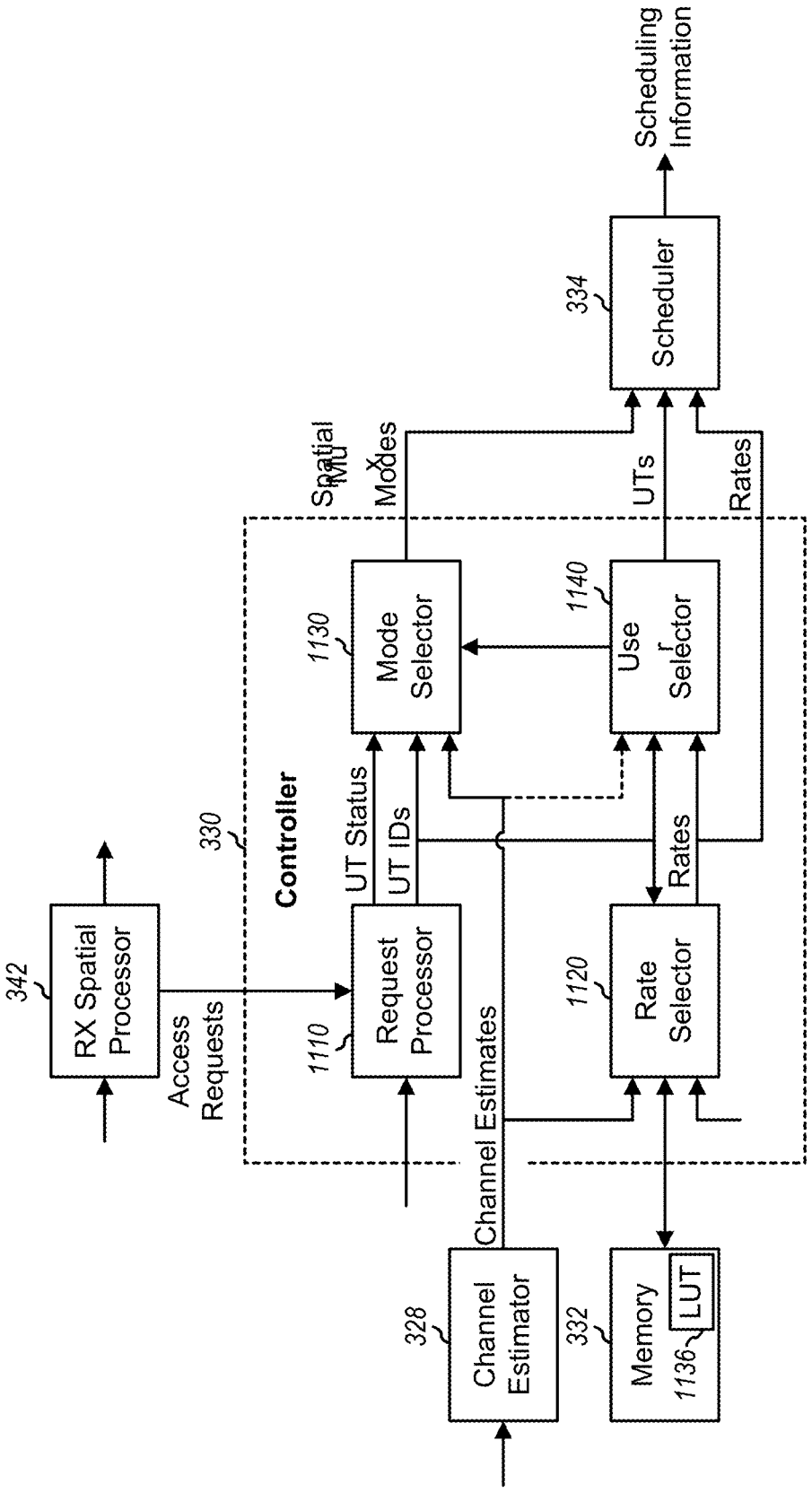
Scheduling Information
334
Scheduler
Spatial MU Modes
UTs
Rates
1130
Mode Selector
1140
User Selector
Controller
330
UT Status
UT IDs
Rates
342
RX Spatial Processor
Access Requests
1110
Request Processor
1120
Rate Selector
Channel Estimates
328
Channel Estimator
332
Memory
1136
LUT

FIG. 11

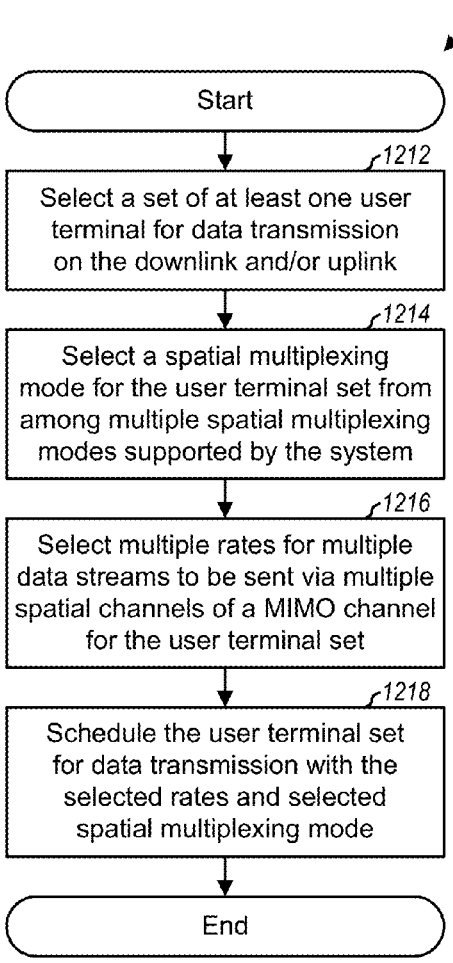
1200
Start
1212
Select a set of at least one user terminal for data transmission on the downlink and/or uplink
1214
Select a spatial multiplexing mode for the user terminal set from among multiple spatial multiplexing modes supported by the system
1216
Select multiple rates for multiple data streams to be sent via multiple spatial channels of a MIMO channel for the user terminal set
1218
Schedule the user terminal set for data transmission with the selected rates and selected spatial multiplexing mode
End

FIG. 12

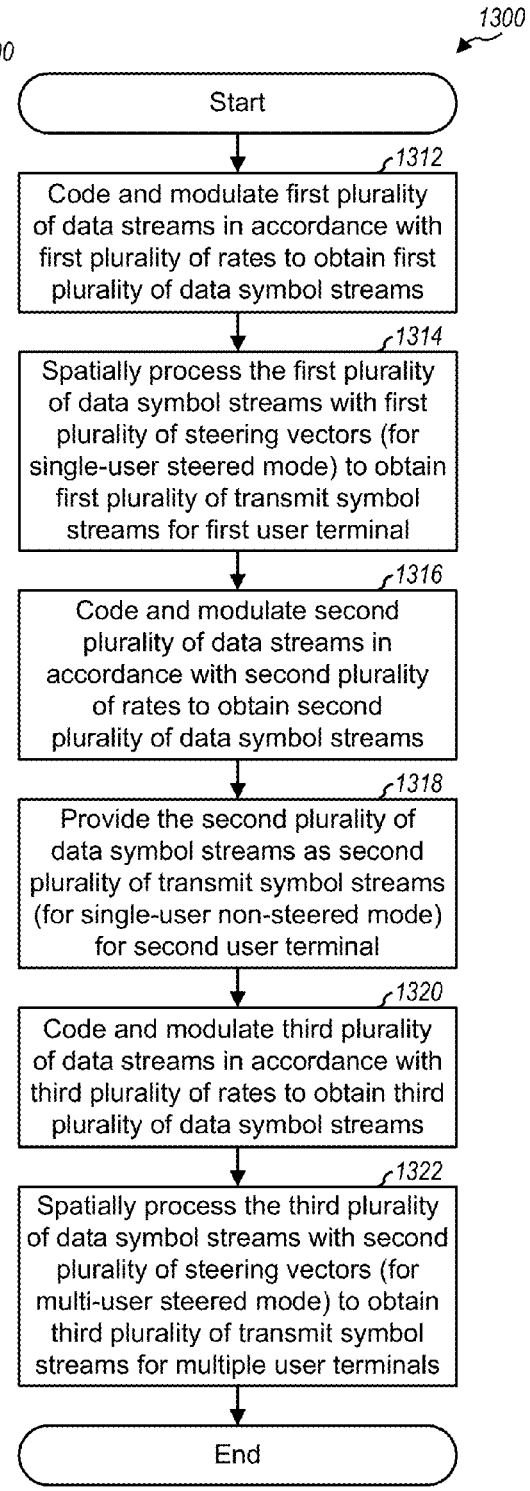
1300
Start
1312
Code and modulate first plurality of data streams in accordance with first plurality of rates to obtain first plurality of data symbol streams
1314
Spatially process the first plurality of data symbol streams with first plurality of steering vectors (for single-user steered mode) to obtain first plurality of transmit symbol streams for first user terminal
1316
Code and modulate second plurality of data streams in accordance with second plurality of rates to obtain second plurality of data symbol streams
1318
Provide the second plurality of data symbol streams as second plurality of transmit symbol streams (for single-user non-steered mode) for second user terminal
1320
Code and modulate third plurality of data streams in accordance with third plurality of rates to obtain third plurality of data symbol streams
1322
Spatially process the third plurality of data symbol streams with second plurality of steering vectors (for multi-user steered mode) to obtain third plurality of transmit symbol streams for multiple user terminals
End

FIG. 13

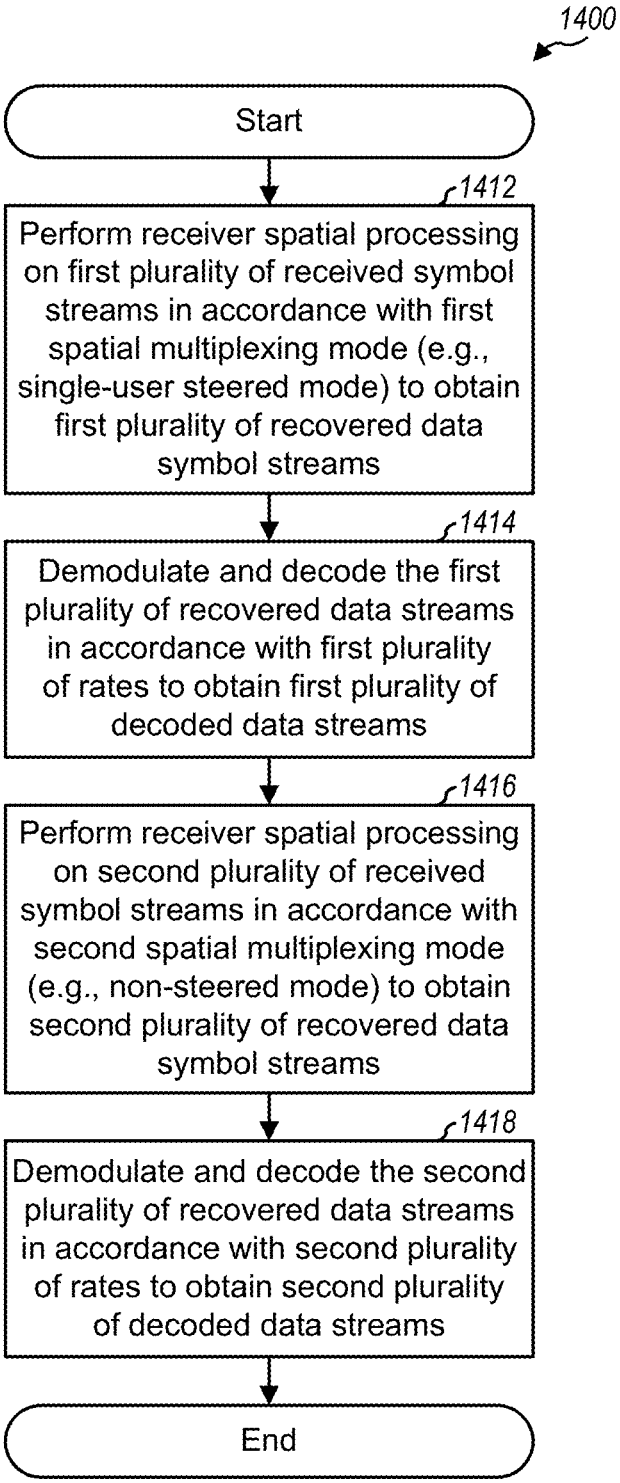
1400
Start
1412
Perform receiver spatial processing on first plurality of received symbol streams in accordance with first spatial multiplexing mode (e.g., single-user steered mode) to obtain first plurality of recovered data symbol streams
1414
Demodulate and decode the first plurality of recovered data streams in accordance with first plurality of rates to obtain first plurality of decoded data streams
1416
Perform receiver spatial processing on second plurality of received symbol streams in accordance with second spatial multiplexing mode (e.g., non-steered mode) to obtain second plurality of recovered data symbol streams
1418
Demodulate and decode the second plurality of recovered data streams in accordance with second plurality of rates to obtain second plurality of decoded data streams
End

FIG. 14

MIMO SYSTEM WITH MULTIPLE SPATIAL MULTIPLEXING MODES

CLAIM OF PRIORITY

This application for patent is a continuation application of, and claims the benefit of priority from, U.S. patent application Ser. No. 12/649,040, entitled "MIMO System with Multiple Spatial Multiplexing Modes," filed on Dec. 29, 2009, which is a continuation of, and claims the benefit of priority from, U.S. patent application Ser. No. 10/693,429, entitled "MIMO System with Multiple Spatial Multiplexing Modes" filed on Oct. 23, 2003, which claims the benefit of priority from U.S. Provisional Patent Application Ser. No. 60/421,309, entitled "MIMO WLAN System" filed Oct. 25, 2002, all of which are assigned to the assignee of this application for patent and are fully incorporated herein by reference for all purposes.

BACKGROUND

1. Field

The present invention relates generally to communication, and more specifically to a multiple-input multiple-output (MIMO) communication system with multiple transmission modes.

2. Background

A MIMO system employs multiple (N_T) transmit antennas and multiple (N_R) receive antennas for data transmission and is denoted as an (N_T, N_R) system. A MIMO channel formed by the N_T transmit and N_R receive antennas may be decomposed into N_S spatial channels, where $N_S \leq \min\{N_T, N_R\}$. The N_S spatial channels may be used to transmit N_S independent data streams to achieve greater overall throughput. In general, spatial processing may or may not be performed at a transmitter and is normally performed at a receiver to simultaneously transmit and recover multiple data streams.

A conventional MIMO system typically uses a specific transmission scheme to simultaneously transmit multiple data streams. This transmission scheme may be selected based on a trade-off of various factors such as the requirements of the system, the amount of feedback from the receiver to the transmitter, the capabilities of the transmitter and receiver, and so on. The transmitter, receiver, and system are then designed to support and operate in accordance with the selected transmission scheme. This transmission scheme typically has favorable features as well as unfavorable ones, which can impact system performance.

There is therefore a need in the art for a MIMO system capable of achieving improved performance.

SUMMARY

A MIMO system that supports multiple spatial multiplexing modes for improved performance and greater flexibility is described herein. Spatial multiplexing refers to the transmission of multiple data streams simultaneously via multiple spatial channels of a MIMO channel. The multiple spatial multiplexing modes may include (1) a single-user steered mode that transmits multiple data streams on orthogonal spatial channels to a single receiver, (2) a single-user non-steered mode that transmits multiple data streams from multiple antennas to a single receiver without spatial processing at a transmitter, (3) a multi-user steered mode that transmits multiple data streams simultaneously to multiple receivers with spatial processing at a transmitter, and (4) a multi-user non-steered mode that transmits multiple data streams from multiple antennas (co-located or non co-located) without spatial processing at the transmitter(s) to receiver(s) having multiple antennas.

A set of at least one user terminal is selected for data transmission on the downlink and/or uplink. A spatial multiplexing mode is selected for the user terminal set from among the multiple spatial multiplexing modes supported by the system. Multiple rates are also selected for multiple data streams to be transmitted via multiple spatial channels of a MIMO channel for the user terminal set. The user terminal set is scheduled for data transmission on the downlink and/or uplink with the selected rates and the selected spatial multiplexing mode. Thereafter, multiple data streams are processed (e.g., coded, interleaved, and modulated) in accordance with the selected rates and further spatially processed in accordance with the selected spatial multiplexing mode for transmission via multiple spatial channels.

Various aspects and embodiments of the invention are described in further detail below.

BRIEF DESCRIPTION OF THE DRAWINGS

FIG. **1** shows a multiple-access MIMO system;

FIG. **2** shows a frame and channel structure for the MIMO system;

FIG. **3** shows an access point and two user terminals in the MIMO system;

FIG. **4** shows a transmit (TX) data processor at the access point;

FIG. **5** shows a TX spatial processor and modulators at the access point;

FIG. **6** shows demodulators and a receive (RX) spatial processor at a multi-antenna user terminal;

FIG. **7** shows an RX data processor at the multi-antenna user terminal;

FIG. **8** shows an RX spatial processor and an RX data processor that implement a successive interference cancellation (SIC) technique;

FIG. **9** shows the transmit/receive chains at the access point and user terminal;

FIG. **10** shows a closed-loop rate control mechanism;

FIG. **11** shows a controller and a scheduler for scheduling user terminals;

FIG. **12** shows a process for scheduling user terminals for data transmission;

FIG. **13** shows a process for transmitting data on the downlink; and

FIG. **14** shows a process for receiving data on the uplink.

DETAILED DESCRIPTION

The word "exemplary" is used herein to mean "serving as an example, instance, or illustration." Any embodiment described herein as "exemplary" is not necessarily to be construed as preferred or advantageous over other embodiments.

A MIMO system may utilize a single carrier or multiple carriers for data transmission. Multiple carriers may be provided by orthogonal frequency division multiplexing (OFDM), other multi-carrier modulation techniques, or some other constructs. OFDM effectively partitions the overall system bandwidth into multiple (N_F) orthogonal subbands, which are also commonly referred to as tones, bins, carriers, and frequency channels. With OFDM, each subband is associated with a respective carrier that may be modulated with data. The following description is for a MIMO system that utilizes OFDM. However, the concepts described herein are equally applicable for a single carrier MIMO system.

The MIMO system supports multiple spatial multiplexing modes for improved performance and greater flexibility. Table 1 lists the supported spatial multiplexing modes and their short descriptions.

TABLE 1

Spatial Multiplexing Mode	Description
Single-User Steered	Multiple data streams are transmitted on orthogonal spatial channels to a single receiver.
Single-User Non-Steered	Multiple data streams are transmitted from multiple antennas to a single receiver without spatial processing at a transmitter.
Multi-User Steered	Multiple data streams are transmitted simultaneously (1) from a single transmitter to multiple receivers or (2) from multiple transmitters to a single receiver, both with spatial processing at the transmitter(s).
Multi-User Non-Steered	Multiple data streams are transmitted simultaneously (1) from multiple transmitters to a single receiver or (2) from a single transmitter to multiple receivers, both without spatial processing at the transmitter(s).

The MIMO system may also support other and/or different spatial multiplexing modes, and this is within the scope of the invention.

Each spatial multiplexing mode has different capabilities and requirements. The steered spatial multiplexing modes can typically achieve better performance but can only be used if the transmitter has sufficient channel state information to orthogonalize the spatial channels via decomposition or some other technique, as described below. The non-steered spatial multiplexing modes require very little information to simultaneously transmit multiple data streams, but performance may not be quite as good as the steered spatial multiplexing modes. A suitable spatial multiplexing mode may be selected for use depending on the available channel state information, the capabilities of the transmitter and receiver, system requirements, and so on. Each of these spatial multiplexing modes is described below.

Single-User Steered Spatial Multiplexing Mode

A frequency-selective MIMO channel formed by N_T transmit antennas and N_R receive antennas may be characterized by N_F frequency-domain channel response matrices $\underline{H}(k)$, for $k=1 \ldots N_F$, each with dimensions of $N_R \times N_T$. The channel response matrix for each subband may be expressed as:

$$\underline{H}(k) = \begin{bmatrix} h_{1,1}(k) & h_{1,2}(k) & \ldots & h_{1,N_T}(k) \\ h_{2,1}(k) & h_{2,2}(k) & \ldots & h_{2,N_T}(k) \\ \vdots & \vdots & \ddots & \vdots \\ h_{N_R,1}(k) & h_{N_R,2}(k) & \ldots & h_{N_R,N_T}(k) \end{bmatrix}, \quad \text{Eq. (1)}$$

where entry $h_{i,j}(k)$, for $i=1 \ldots N_R$, $j=1 \ldots N_T$, and $k=1 \ldots N_F$, is the coupling (i.e., complex gain) between transmit antenna j and receive antenna i for subband k.

The channel response matrix $\underline{H}(k)$ for each subband may be "diagonalized" to obtain N_S eigenmodes for that subband. This diagonalization may be achieved by performing either singular value decomposition of the channel response matrix $\underline{H}(k)$ or eigenvalue decomposition of a correlation matrix of $\underline{H}(k)$, which is $\underline{R}(k)=\underline{H}^H(k)\underline{H}(k)$, where "^{H}" denotes the conjugate transpose.

The singular value decomposition of the channel response matrix $\underline{H}(k)$ for each subband may be expressed as:

$$\underline{H}(k)=\underline{U}(k)\underline{\Sigma}(k)\underline{V}^H(k), \quad \text{Eq. (2)}$$

where

$\underline{U}(k)$ is an $(N_R \times N_R)$ unitary matrix of left eigenvectors of $\underline{H}(k)$;

$\underline{\Sigma}(k)$ is an $(N_R \times N_T)$ diagonal matrix of singular values of $\underline{H}(k)$; and

$\underline{V}(k)$ is an $(N_T \times N_T)$ unitary matrix of right eigenvectors of $\underline{H}(k)$.

A unitary matrix $\underline{M}$ is characterized by the property $\underline{M}^H\underline{M}=\underline{I}$, where $\underline{I}$ is the identity matrix. The columns of a unitary matrix are orthogonal to one another.

The eigenvalue decomposition of the correlation matrix of $\underline{H}(k)$ for each subband may be expressed as:

$$\underline{R}(k)=\underline{H}^H(k)\underline{H}(k)=\underline{V}(k)\underline{\Lambda}(k)\underline{V}^H(k), \quad \text{Eq. (3)}$$

where

$\underline{\Lambda}(k)$ is an $(N_T \times N_T)$ diagonal matrix of eigenvalues of $\underline{R}(k)$.

As shown in equations (2) and (3), the columns of $\underline{V}(k)$ are eigenvectors of $\underline{R}(k)$ as well as right eigenvectors of $\underline{H}(k)$.

Singular value decomposition and eigenvalue decomposition are described by Gilbert Strang in a book entitled "Linear Algebra and Its Applications," Second Edition, Academic Press, 1980. The single-user steered spatial multiplexing mode may be implemented with either singular value decomposition or eigenvalue decomposition. For clarity, singular value decomposition is used for the following description.

The right eigenvectors of $\underline{H}(k)$ are also referred to as "steering" vectors and may be used for spatial processing by a transmitter to transmit data on the N_S eigenmodes of $\underline{H}(k)$. The left eigenvectors of $\underline{H}(k)$ may be used for spatial processing by a receiver to recover the data transmitted on the N_S eigenmodes. The eigenmodes may be viewed as orthogonal spatial channels obtained through decomposition. The diagonal matrix $\underline{\Sigma}(k)$ contains non-negative real values along the diagonal and zeros elsewhere. These diagonal entries are referred to as the singular values of $\underline{H}(k)$ and represent the channel gains for the N_S eigenmodes of $\underline{H}(k)$. The singular values of $\underline{H}(k)$, $\{\sigma_1(k)\ \sigma_2(k) \ldots \sigma_{N_S}(k)\}$, are also the square roots of the eigenvalues of $\underline{R}(k)$, $\{\lambda_1(k)\ \lambda_2(k) \ldots \lambda_{N_S}(k)\}$, where $\sigma_i(k)=\sqrt{\lambda_i(k)}$. Singular value decomposition may be performed independently on the channel response matrix $\underline{H}(k)$ for each of the N_F subbands to determine the N_S eigenmodes for that subband.

For each subband, the singular values in the matrix $\underline{\Sigma}(k)$ may be ordered from largest to smallest, and the eigenvectors in the matrices $\underline{V}(k)$ and $\underline{U}(k)$ may be ordered correspondingly. A "wideband" eigenmode may be defined as the set of same-order eigenmodes of all N_F subbands after the ordering (i.e., wideband eigenmode m includes eigenmode m of all subbands). In general, all or fewer than N_F subbands may be used for transmission, with the unused subbands being filled with signal values of zero. For simplicity, the following description assumes that all N_F subbands are used for transmission.

The single-user steered spatial multiplexing mode (or simply, the "single-user steered mode") transmits N_S data symbol streams on the N_S eigenmodes of the MIMO channel. This requires spatial processing by both the transmitter and the receiver.

The spatial processing at the transmitter for each subband for the single-user steered mode may be expressed as:

$$x_{su\text{-}s}(k)=\underline{V}(k)\underline{s}(k), \quad \text{Eq. (4)}$$

where

$\underline{s}(k)$ is an $(N_T \times 1)$ vector with N_S non-zero entries for N_S data symbols to be transmitted on the N_S eigenmodes for subband k; and

$x_{su\text{-}s}$ (k) is an (N_T×1) vector with NT entries for NT transmit symbols to be sent from the NT transmit antennas for subband k.

The NS entries of $\underline{s}(k)$ can represent NS data symbol streams and the remaining entries of $\underline{s}(k)$, if any, are filled with zeros.

The received symbols obtained by the receiver for each subband may be expressed as:

$$\underline{r}_{su\text{-}s}(k)=\underline{H}(k)\underline{x}_{su\text{-}s}(k)+\underline{n}(k)=\underline{H}(k)\underline{V}(k)\underline{s}(k)+\underline{n}(k), \quad \text{Eq. (5)}$$

where

$\underline{r}_{su\text{-}s}(k)$ is an (N_R×1) vector with N_R entries for N_R received symbols obtained via the N_R receive antennas for subband k; and

$\underline{n}(k)$ is a noise vector for subband k.

The spatial processing at the receiver to recover the data vector $\underline{s}(k)$ for each subband may be expressed as:

$$\begin{aligned}\hat{\underline{s}}_{su\text{-}s}(k) &= \underline{\Sigma}^{-1}(k)\underline{U}^H(k)\underline{r}_{su\text{-}s}(k), \quad \text{Eq. (6)}\\ &= \underline{\Sigma}^{-1}(k)\underline{U}^H(k)(\underline{H}(k)\underline{V}(k)\underline{s}(k)+\underline{n}(k)),\\ &= \underline{\Sigma}^{-1}(k)\underline{U}^H(k)(\underline{U}(k)\underline{\Sigma}(k)\underline{V}^H(k)\underline{V}(k)\underline{s}(k)+\underline{n}(k)),\\ &= \underline{s}(k)+\underline{n}_{su\text{-}s}(k),\end{aligned}$$

or

$$\tilde{\underline{s}}_{su\text{-}s}(k) = \underline{U}^H(k)\underline{r}_{su\text{-}s}(k)$$

and

$$\hat{\underline{s}}_{su\text{-}s}(k) = \underline{\Sigma}^{-1}(k)\tilde{\underline{s}}_{su\text{-}s}(k),$$

where

$\tilde{\underline{s}}_{su\text{-}s}(k)$ is an (N_T×1) vector with N_S detected data symbols for subband k;

$\tilde{\underline{s}}_{su\text{-}s}(k)$ is an (N_T×1) vector with N_S recovered data symbols for subband k; and

$\underline{n}_{su\text{-}s}(k)$ is a vector of post-processed noise for subband k.

The vector $\hat{\underline{s}}_{su\text{-}s}(k)$ is an unnormalized estimate of the data vector $\underline{s}(k)$, and the vector $\hat{\underline{s}}_{su\text{-}s}(k)$ is a normalized estimate of $\underline{s}(k)$. The multiplication by $\underline{\Sigma}^{-1}(k)$ in equation (6) accounts for the (possibly different) gains of the N_S spatial channels and normalizes the output of the receiver spatial processing so that recovered data symbols with the proper magnitude are provided to a subsequent processing unit.

For the single-user steered mode, the matrix $\underline{F}_{su\text{-}s}(k)$ of steering vectors used by the transmitter for each subband may be expressed as:

$$\underline{F}_{su\text{-}s}(k)=\underline{V}(k). \quad \text{Eq. (7)}$$

The spatial filter matrix used by the receiver for each subband may be expressed as:

$$\underline{M}_{su\text{-}s}(k)=\underline{U}^H(k). \quad \text{Eq. (8)}$$

The single-user steered mode may be used if the transmitter has channel state information for either the channel response matrix $\underline{H}(k)$ or the matrix $\underline{V}(k)$ of right eigenvectors of $\underline{H}(k)$, for k=1 . . . N_F. The transmitter can estimate $\underline{H}(k)$ or $\underline{V}(k)$ for each subband based on a pilot transmitted by the receiver, as described below, or may be provided with this information by the receiver via a feedback channel. The receiver can typically obtain $\underline{H}(k)$ or $\underline{U}^H(k)$ for each subband based on a pilot transmitted by the transmitter. Equation (6) indicates that the N_S data symbol streams $\underline{s}(k)$, distorted only by post-processed channel noise $\underline{n}_{su\text{-}s}(k)$, may be obtained for the single-user steered mode with the proper spatial processing at both the transmitter and the receiver.

The signal-to-noise-and-interference ratio (SNR) for the single-user steered mode may be expressed as:

$$\gamma_{su\text{-}s,m}(k) = \frac{P_m(k)\lambda_m(k)}{\sigma^2}, \; m = 1 \ldots N_S, \quad \text{Eq. (9)}$$

where

P_m (k) is the transmit power used for the data symbol transmitted on subband k of wideband eigenmode m;

λ_m (k) is the eigenvalue for subband k of wideband eigenmode m, which is the m-th diagonal element of $\underline{\Lambda}(k)$; and

$\gamma_{su\text{-}s,m}(k)$ is the SNR for subband k of wideband eigenmode m.

Single-User Non-Steered Spatial Multiplexing Mode

The single-user non-steered spatial multiplexing mode (or simply, the "single-user non-steered mode") may be used if the transmitter does have not sufficient channel state information or if the single-user steered mode cannot be supported for any reasons. The single-user non-steered mode transmits N_S data symbol streams from N_T transmit antennas without any spatial processing at the transmitter.

For the single-user non-steered mode, the matrix $\underline{F}_{ns}(k)$ of steering vectors used by the transmitter for each subband may be expressed as:

$$\underline{F}_{ns}(k)=\underline{I}. \quad \text{Eq. (10)}$$

The spatial processing at the transmitter for each subband may be expressed as:

$$\underline{x}_{ns}(k)=\underline{s}(k), \quad \text{Eq. (11)}$$

where

$\underline{x}_{ns}(k)$ is the transmit symbol vector for the single-user non-steered mode. A "wideband" spatial channel for this mode may be defined as the spatial channel corresponding to a given transmit antenna (i.e., wideband spatial channel m for the single-user non-steered mode includes all subbands of transmit antenna m).

The received symbols obtained by the receiver for each subband may be expressed as:

$$\underline{r}_{ns}(k)=\underline{H}(k)\underline{x}_{ns}(k)+\underline{n}(k)=\underline{H}(k)\underline{s}(k)+\underline{n}(k). \quad \text{Eq. (12)}$$

The receiver can recover the data vector $\underline{s}(k)$ using various receiver processing techniques such as a channel correlation matrix inversion (CCMI) technique (which is also commonly referred to as a zero-forcing technique), a minimum mean square error (MMSE) technique, a decision feedback equalizer (DFE), a successive interference cancellation (SIC) technique, and so on.

CCMI Spatial Processing

The receiver can use the CCMI technique to separate out the data symbol streams. A CCMI receiver utilizes a spatial filter having a response of $\underline{M}_{ccmi}(k)$, for k=1 . . . N_F, which can be expressed as:

$$\underline{M}_{ccmi}(k)=[\underline{H}^H(k)\underline{H}(k)]^{-1}\underline{H}^H(k)=\underline{R}^{-1}(k)\underline{H}^H(k) \quad \text{Eq. (13)}$$

The spatial processing by the CCMI receiver for the single-user non-steered mode may be expressed as:

$$\begin{aligned}\hat{\underline{s}}_{ccmi}(k) &= \underline{M}_{ccmi}(k)\underline{r}_{ns}(k), \quad \text{Eq. (14)}\\ &= \underline{R}^{-1}(k)\underline{H}^H(k)(\underline{H}(k)\underline{s}(k)+\underline{n}(k)),\\ &= \underline{s}(k)+\underline{N}_{ccmi}(k),\end{aligned}$$

where

$\hat{\underline{s}}_{ccmi}(k)$ is an ($N_T \times 1$) vector with N_S recovered data symbols for subband k; and

$\underline{n}_{ccmi}(k)=\underline{M}_{ccmi}(k)\underline{n}(k)$ is the CCMI filtered noise for subband k.

An autocovariance matrix $\underline{\Phi}_{ccmi}(k)$ of the CCMI filtered noise for each subband may be expressed as:

$$\begin{aligned}\underline{\varphi}_{ccmi}(k) &= E[\underline{n}_{ccmi}(k)\underline{n}^H_{ccmi}(k)], \\ &= \underline{M}_{ccmi}(k)\underline{\varphi}_{nn}(k)\underline{M}^H_{ccmi}(k), \\ &= \sigma^2 \underline{R}^{-1}(k),\end{aligned} \quad \text{Eq. (15)}$$

where

E[x] is the expected value of x. The last equality in equation (15) assumes that the noise $\underline{n}(k)$ is additive white Gaussian noise (AWGN) with zero mean, a variance of σ^2, and an autocovariance matrix of $\underline{\Phi}_{nn}(k)=E[\underline{n}(k)\underline{n}^H(k)]=\sigma^2\underline{I}$. In this case, the SNR for the CCMI receiver may be expressed as:

$$\gamma_{ccmi,m}(k) = \frac{P_m(k)}{r_{mm}(k)\sigma^2}, \; m = 1 \ldots N_S, \quad \text{Eq. (16)}$$

where

$P_m(k)$ is the transmit power used for the data symbol transmitted on subband k of wideband spatial channel m;

$r_{mm}(k)$ is the m-th diagonal element of $\underline{R}(k)$ for subband k; and

$\gamma_{ccmi,m}(k)$ is the SNR for subband k of wideband spatial channel m.

Due to the structure of $\underline{R}(k)$, the CCMI technique may amplify the noise.

MMSE Spatial Processing

The receiver can use the MMSE technique to suppress crosstalk between the data symbol streams and maximize the SNRs of the recovered data symbol streams. An MMSE receiver utilizes a spatial filter having a response of $\underline{M}_{mmse}(k)$, for k=1 . . . N_F, which is derived such that the mean square error between the estimated data vector from the spatial filter and the data vector $\underline{s}(k)$ is minimized. This MMSE criterion may be expressed as:

$$\min_{(\underline{M}_{mmse}(k))} E[(\underline{M}_{mmse}(k)\underline{r}_{ns}(k)-\underline{s}(k))^H(\underline{M}_{mmse}(k)\underline{r}_{ns}(k)-\underline{s}(k))]. \quad \text{Eq. (17)}$$

The solution to the optimization problem posed in equation (17) may be obtained in various manners. In one exemplary method, the MMSE spatial filter matrix $\underline{M}_{mmse}(k)$ for each subband may be expressed as:

$$\begin{aligned}\underline{M}_{mmse}(k) &= \underline{H}^H(k)\left[\underline{H}(k)\underline{H}^H(k)+\underline{\varphi}_{nn}(k)\right]^{-1}, \\ &= \underline{H}^H(k)[\underline{H}(k)\underline{H}^H(k)+\sigma^2\underline{I}]^{-1}.\end{aligned} \quad \text{Eq. (18)}$$

The second equality in equation (18) assumes that the noise vector $\underline{n}(k)$ is AWGN with zero mean and variance of σ^2.

The spatial processing by the MMSE receiver for the single-user non-steered mode is composed of two steps. In the first step, the MMSE receiver multiplies the vector $\underline{r}_{ns}(k)$ for the N_R received symbol streams with the MMSE spatial filter matrix $\underline{M}_{mmse}(k)$ to obtain a vector $\tilde{\underline{s}}_{mmse}(k)$ for N_S detected symbol streams, as follows:

$$\begin{aligned}\tilde{\underline{s}}_{mmse}(k) &= \underline{M}_{mmse}(k)\underline{r}_{ns}(k), \\ &= \underline{M}_{mmse}(k)(\underline{H}(k)\underline{s}(k)+\underline{n}(k)), \\ &= \underline{Q}(k)\underline{s}(k)+\underline{n}_{mmse}(k),\end{aligned} \quad \text{Eq. (19)}$$

where

$\underline{n}_{mmse}(k) = \underline{M}_{mmse}(k)\underline{n}(k)$ is the *MMSE* filtered noise and

$\underline{Q}(k) = \underline{M}_{mmse}(k)\underline{H}(k)$.

The N_S detected symbol streams are unnormalized estimates of the N_S data symbol streams.

In the second step, the MMSE receiver multiplies the vector $\tilde{\underline{s}}_{mmse}(k)$ with a scaling matrix $\underline{D}^{-1}{}_{mmse}(k)$ to obtain a vector $\hat{\underline{s}}_{mmse}(k)$ for the N_S recovered data symbol streams, as follows:

$$\hat{\underline{s}}_{mmse}(k)=\underline{D}^{-1}{}_{mmse}(k)\tilde{\underline{s}}_{mmse}(k) \quad \text{Eq. (20)}$$

where

$\underline{D}_{mmse}(k)$ is a diagonal matrix whose diagonal elements are the diagonal elements of $\underline{Q}(k)$, i.e., $\underline{D}_{mmse}(k)=\text{diag}[\underline{Q}(k)]$. The N_S recovered data symbol streams are normalized estimates of the N_S data symbol streams.

Using the matrix inverse identity, the matrix $\underline{Q}(k)$ can be rewritten as:

$$\begin{aligned}\underline{Q}(k) &= \underline{H}^H(k)\underline{\varphi}^{-1}_{nn}(k)\underline{H}(k)\left[\underline{H}^H(k)\underline{\varphi}^{-1}_{nn}(k)\underline{H}(k)+\underline{I}\right]^{-1}, \\ &= \underline{H}^H(k)\underline{H}(k)[\underline{H}^H(k)\underline{H}(k)+\sigma^2\underline{I}]^{-1}.\end{aligned} \quad \text{Eq. (21)}$$

The second equality in equation (21) assumes that the noise is AWGN with zero mean and variance of σ^2.

The SNR for the MMSE receiver may be expressed as:

$$\gamma_{mmse,m}(k) = \frac{q_{mm}(k)}{1-q_{mm}(k)}P_m(k), \; m = 1 \ldots N_S, \quad \text{Eq. (22)}$$

where

$q_{mm}(k)$ is the m-th diagonal element of $\underline{Q}(k)$ for subband k; and

$\gamma_{mmse,m}(k)$ is the SNR for subband k of wideband spatial channel m.

Successive Interference Cancellation Receiver Processing

The receiver can process the N_R received symbol streams using the SIC technique to recover the N_S data symbol streams. For the SIC technique, the receiver initially performs spatial processing on the N_R received symbol streams (e.g., using CCMI, MMSE, or some other technique) and obtains one recovered data symbol stream. The receiver further processes (e.g., demodulates, deinterleaves, and decodes) this recovered data symbol stream to obtain a decoded data stream. The receiver then estimates the interference this stream causes to the other N_S-1 data symbol streams and cancels the estimated interference from the N_R received symbol streams to obtain N_R modified symbol streams. The receiver then repeats the same processing on the N_R modified symbol streams to recover another data symbol stream.

For a SIC receiver, the input (i.e., received or modified) symbol streams for stage l, where l=1 . . . N_S, may be expressed as:

$$\underline{r}'_{sic}{}^{l}(k)=\underline{H}^{l}(k)\underline{x}_{ns}{}^{l}(k)+\underline{n}(k)=\underline{H}^{l}(k)\underline{s}^{l}(k)+\underline{n}(k), \quad \text{Eq. (23)}$$

where

$\underline{r}_{sic}{}^{l}(k)$ is a vector of N_R modified symbols for subband k in stage l, and $\underline{r}_{sic}{}^{1}(k)=\underline{r}_{ns}(k)$ for the first stage;

$\underline{s}^{l}(k)$ is a vector of (N_T-l+1) data symbols not yet recovered for subband k in stage l; and

$\underline{H}^{l}(k)$ is an $N_R\times(N_T-l+1)$ reduced channel response matrix for subband k in stage l.

Equation (23) assumes that the data symbol streams recovered in the (l−1) prior stages are canceled. The dimensionality of the channel response matrix $\underline{H}(k)$ successively reduces by one column for each stage as a data symbol stream is recovered and canceled. For stage, the reduced channel response matrix $\underline{H}^{l}(k)$ is obtained by removing (l−1) columns in the original matrix $\underline{H}(k)$ corresponding to the (l−1) data symbol streams previously recovered, i.e.,

$$\underline{H}^{\ell}(k)=\left[\underline{h}_{j_\ell}(k)\ \ \underline{h}_{j_{\ell+1}}(k)\ \ldots\ \underline{h}_{j_{N_T}}(k)\right],$$

where $\underline{h}_{j_n}(k)$ is an $N_R\times1$ vector for the channel response between transmit antenna j_n and the N_R receive antennas. For stage l, the (l−1) data symbol streams recovered in the prior stages are given indices of $\{j_1\ j_2\ \ldots\ j_{l-1}\}$, and the (N_T-l+1) data symbol streams not yet recovered are given indices of $\{j_l\ j_{l+1}\ \ldots\ j_{N_T}\}$.

For stage l, the SIC receiver derives a spatial filter matrix $\underline{M}_{sic}{}^{l}(k)$, for k=1 . . . N_F, based on the reduced channel response matrix $\underline{H}^{l}(k)$ (instead of the original matrix $\underline{H}(k)$) using the CCMI technique as shown in equation (13), the MMSE technique as shown in equation (18), or some other technique. The matrix $\underline{M}_{sic}{}^{l}(k)$ has dimensionality of $(N_T-l+1)\times N_R$. Since $\underline{H}^{l}(k)$ is different for each stage, the spatial filter matrix $\underline{M}_{sic}{}^{l}(k)$ is also different for each stage.

The SIC receiver multiplies the vector $\underline{r}_{sic}{}^{l}(k)$ for the N_R modified symbol streams with the spatial filter matrix $\underline{M}_{sic}{}^{l}(k)$ to obtain a vector $\underline{\tilde{s}}_{sic}{}^{l}(k)$ for (N_T-l+1) detected symbol streams, as follows:

$$\begin{aligned}\underline{\tilde{s}}^{\ell}_{sic}(k)&=\underline{M}^{\ell}_{sic}(k)\underline{r}^{\ell}_{sic}(k), \quad \text{Eq. (24)}\\ &=\underline{M}^{\ell}_{sic}(k)(\underline{H}^{\ell}(k)\underline{s}^{\ell}(k)+\underline{n}^{\ell}(k)),\\ &=\underline{Q}^{\ell}_{sic}(k)\underline{s}^{\ell}(k)+\underline{n}^{\ell}_{sic}(k),\end{aligned}$$

where

$\underline{n}_{sic}{}^{l}(k)=\underline{M}_{sic}{}^{l}(k)\underline{n}^{l}(k)$ is the filtered noise for subband k of stage l, $\underline{n}^{l}(k)$ is a reduced vector of $\underline{n}(k)$, and $\underline{Q}_{sic}{}^{l}(k)=\underline{M}_{sic}{}^{l}(k)\underline{H}^{l}(k)$.

The SIC receiver then selects one of the detected symbol streams for recovery. Since only one data symbol stream is recovered in each stage, the SIC receiver can simply derive one $(1\times N_R)$ spatial filter row vector $\underline{m}_{j_l}{}^{l}(k)$ for the data symbol stream $\{s_{j_l}\}$ to be recovered in stage l. The row vector $\underline{m}_{j_l}{}^{l}(k)$ is one row of the matrix $\underline{M}_{sic}{}^{l}(k)$. In this case, the spatial processing for stage l to recover the data symbol stream $\{s_{j_l}\}$ may be expressed as:

$$\tilde{s}_{j_l}(k)=\underline{m}_{j_l}{}^{l}(k)\underline{r}_{sic}{}^{l}(k)=\underline{q}_{j_l}{}^{l}(k)\underline{s}^{l}(k)+\underline{m}_{j_l}{}^{l}(k)\underline{n}(k), \quad \text{Eq. (25)}$$

where $\underline{q}_{j_l}{}^{l}(k)$ is the row of $\underline{Q}_{sic}{}^{l}(k)$ corresponding to data symbol stream $\{s_{j_l}\}$.

In any case, the receiver scales the detected symbol stream $\{\tilde{s}_{j_l}\}$ to obtain a recovered data symbol stream $\{\hat{s}_{j_l}\}$ and further processes (e.g., demodulates, deinterleaves, and decodes) the stream $\{\hat{s}_{j_l}\}$ to obtain a decoded data stream $\{\hat{d}_{j_l}\}$. The receiver also forms an estimate of the interference this stream causes to the other data symbol streams not yet recovered. To estimate the interference, the receiver re-encodes, interleaves, and symbol maps the decoded data stream $\{\hat{d}_{j_l}\}$ in the same manner as performed at the transmitter and obtains a stream of "remodulated" symbols $\{\check{s}_{j_l}\}$, which is an estimate of the data symbol stream just recovered. The receiver then convolves the remodulated symbol stream with each of N_R elements in the channel response vector $\underline{h}_{j_l}(k)$ for stream $\{s_{j_l}\}$ to obtain N_R interference components $\underline{i}_{j_l}(k)$ caused by this stream. The N_R interference components are then subtracted from the N_R modified symbol streams $\underline{r}_{sic}{}^{l}(k)$ for stage l to obtain N_R modified symbol streams $\underline{r}_{sic}{}^{l+1}(k)$ for the next stage l+1, i.e., $\underline{r}_{sic}{}^{l+1}(k)=\underline{r}_{sic}{}^{l}(k)-\underline{i}_{j_l}(k)$. The modified symbol streams $\underline{r}_{sic}{}^{l+1}(k)$ represent the streams that would have been received if the data symbol stream $\{s_{j_l}\}$ had not been transmitted (i.e., assuming that the interference cancellation was effectively performed).

The SIC receiver processes the N_R received symbol streams in N_S successive stages. For each stage, the SIC receiver (1) performs spatial processing on either the N_R received symbol streams or the N_R modified symbol streams from the preceding stage to obtain one recovered data symbol stream, (2) decodes this recovered data symbol stream to obtain a corresponding decoded data stream, (3) estimates and cancels the interference due to this stream, and (4) obtains N_R modified symbol streams for the next stage. If the interference due to each data stream can be accurately estimated and canceled, then later recovered data streams experience less interference and may be able to achieve higher SNRs.

For the SIC technique, the SNR of each recovered data symbol stream is dependent on (1) the spatial processing technique (e.g., CCMI or MMSE) used for each stage, (2) the specific stage in which the data symbol stream is recovered, and (3) the amount of interference due to data symbol streams recovered in later stages. The SNR for the SIC receiver with CCMI may be expressed as:

$$\gamma_{sic-ccmi,m}(k)=\frac{P_m(k)}{r'_{mm}(k)\sigma^2},\ m=1\ \ldots\ N_S, \quad \text{Eq. (26)}$$

where $r_{mm}{}^{l}(k)$ is the m-th diagonal element of $[\underline{R}^{l}(k)]^{-1}$ for subband k, where

$$\underline{R}^{l}(k)=[\underline{H}^{l}(k)]^{H}\underline{H}^{l}(k).$$

The SNR for the SIC receiver with MMSE may be expressed as:

$$\gamma_{sic-mmse,m}(k)=\frac{q'_{mm}(k)}{1-q'_{mm}(k)}P_m(k),\ m=1\ \ldots\ N_S, \quad \text{Eq. (27)}$$

where

$q_{mm}{}^{l}(k)$ is the m-th diagonal element of $\underline{Q}_{sic}{}^{l}(k)$ for subband k, where $\underline{Q}_{sic}{}^{l}(k)$ is derived as shown in equation (21) but based on the reduced channel response matrix $\underline{H}^{l}(k)$ instead of the original matrix $\underline{H}(k)$.

In general, the SNR progressively improves for data symbol streams recovered in later stages because the interference

from data symbol streams recovered in prior stages is canceled. This then allows higher rates to be used for data symbol streams recovered later.

Multi-User Steered Spatial Multiplexing Mode

The multi-user steered spatial multiplexing mode (or simply, the "multi-user steered mode") supports data transmission from a single transmitter to multiple receivers simultaneously based on "spatial signatures" of the receivers. The spatial signature for a receiver is given by a channel response vector (for each subband) between the N_T transmit antennas and each receive antenna at the receiver. The transmitter may obtain the spatial signatures for the receivers as described below. The transmitter may then (1) select a set of receivers for simultaneous data transmission and (2) derive steering vectors for the data symbol streams to be transmitted to the selected receivers such that transmit stream crosstalk is adequately suppressed at the receivers.

The steering vectors for the multi-user steered mode may be derived in various manners. Two exemplary schemes are described below. For simplicity, the following description is for one subband and assumes that each receiver is equipped with one antenna.

In a channel inversion scheme, the transmitter obtains the steering vectors for multiple receivers using channel inversion. The transmitter initially selects N_T single-antenna receivers for simultaneous transmission. The transmitter obtains a $1\times N_T$ channel response row vector $\underline{h}_i(k)$ for each selected receiver and forms an $N_T\times N_T$ channel response matrix $\underline{H}_{mu\text{-}s}(k)$ with the N_T row vectors for the N_T receivers. The transmitter then uses channel inversion to obtain a matrix $\underline{F}_{mu\text{-}s}(k)$ of N_T steering vectors for the N_T selected receivers, as follows:

$$\underline{F}_{mu\text{-}s}(k)=\underline{H}_{mu\text{-}s}^{-1}(k). \quad \text{Eq. (28)}$$

The spatial processing at the transmitter for each subband for the multi-user steered mode may be expressed as:

$$\underline{x}_{mu\text{-}s}(k)=\underline{F}_{mu\text{-}s}(k)\underline{s}(k) \quad \text{Eq. (29)}$$

where $\underline{x}_{mu\text{-}s}(k)$ is the transmit symbol vector for the multi-user steered mode.

The received symbols at the N_T selected receivers for each subband may be expressed as:

$$\begin{aligned} \underline{r}_{mu\text{-}s}(k) &= \underline{H}_{mu\text{-}s}(k)\underline{x}_{mu\text{-}s}(k)+\underline{n}(k), \\ &= \underline{H}_{mu\text{-}s}(k)\underline{F}_{mu\text{-}s}(k)\underline{s}(k)+\underline{n}(k), \\ &= \underline{s}(k)+\underline{i}(k)+\underline{n}(k), \end{aligned} \quad \text{Eq. (30)}$$

where

$\underline{r}_{mu\text{-}s}(k)$ is an $(N_T\times 1)$ received symbol vector for subband k at the N_T selected receivers, and $\underline{i}(k)$ represents the crosstalk interference due to imperfect estimation of $\underline{F}_{mu\text{-}s}(k)$ at the transmitter.

Each selected receiver would obtain only one entry of the vector $\underline{r}_{mu\text{-}s}(k)$ for each receive antenna. If the spatial processing at the transmitter is effective, then the power in $\underline{i}(k)$ is small, and each recovered data symbol stream experiences little crosstalk from the (N_T-1) other data symbol streams sent to the other receivers.

The transmitter can also transmit a steered pilot to each selected receiver, as described below. Each receiver would then process its steered pilot to estimate the channel gain and phase and coherently demodulate the received symbols from its single antenna with the channel gain and phase estimates to obtain recovered data symbols.

The SNRs achieved for the multi-user steered mode are a function of the autocovariance of the channel response matrix $\underline{H}_{mu\text{-}s}(k)$. Higher SNRs can be achieved by selecting "compatible" user terminals. Different sets and/or combinations of user terminals may be evaluated, and the set/combination with the highest SNRs may be selected for data transmission.

While the channel inversion scheme is appealing in its simplicity, in general, it will provide poor performance, because preconditioning the data symbol streams with the inverse channel response matrix in equation (29) forces the transmitter to put the majority of its power in the worst eigenmodes of the MIMO channel. Also, in some channels, particularly those with large correlations among the elements of $\underline{H}_{mu\text{-}s}(k)$, the channel response matrix is less than full rank, and calculating an inverse will not be possible.

In a precoding scheme, the transmitter precodes N_T data symbol streams to be sent to the N_T selected receivers such that these data symbol streams experience little crosstalk at the receivers. The transmitter can form the channel response matrix $\underline{H}_{mu}(k)$ for the N_T selected receivers. The transmitter then performs QR factorization on $\underline{H}_{mu}(k)$ such that $\underline{H}_{mu}(k)=\underline{F}_{tri}(k)\underline{Q}_{mu}(k)$, where $\underline{F}_{tri}(k)$ is a lower left triangular matrix and $\underline{Q}_{mu}(k)$ is a unitary matrix.

The transmitter performs a precoding operation on the data symbol vector to be transmitted, $\underline{s}(k)=[s_1(k)\ s_2(k)\ldots s_{N_T}(k)]^T$, to obtain a precoded symbol vector $\underline{a}(k)=[a_1(k)\ a_2(k)\ \ldots\ a_{N_T}(k)]^T$, as follows:

$$a_\ell(k)=\frac{1}{f_{\ell\ell}(k)}\left(s_\ell(k)-\sum_{i=1}^{\ell-1} f_{\ell i}(k)a_i(k)\right)\bmod(M/2), \quad \text{Eq. (31)}$$

$$\text{for } \ell=1\ \ldots\ N_T,$$

where

M is the number of levels, spaced at unit intervals, in the in-phase or quadrature dimension of a square QAM signal constellation; and

$f_{ij}(k)$ is the element of $\underline{F}_{tri}(k)$ in row i and column j

The modulo (mod) operation adds a sufficient number of integer multiples of M to the argument so that the result satisfies $a_i(k)\in[-M/2, M/2)$. After this precoding operation, the transmit symbols are computed by processing the precoded symbol vector $\underline{a}(k)$ with the unitary steering matrix $\underline{Q}_{mu}(k)$ to generate the transmit symbol vector $\underline{x}_{mu\text{-}pc}(k)=\underline{Q}_{mu}^H(k)\underline{a}(k)$.

The receive symbol vector for the precoding scheme can be expressed as:

$$\underline{r}_{mu\text{-}pc}(k)=\underline{H}_{mu}(k)\underline{Q}_{mu}^H(k)\underline{a}(k)+\underline{n}(k)=\underline{F}_{tri}(k)\underline{a}(k)+\underline{n}(k). \quad \text{Eq. (32)}$$

It can be shown that $\underline{F}_{tri}(k)\underline{a}(k)\bmod(M/2)=\underline{s}(k)$. Thus, the data symbol vector can be estimated as $\hat{\underline{s}}_{mu\text{-}pc}(k)=\underline{r}_{mu\text{-}pc}(k)\bmod(M/2)$. Each of the N_T selected receivers only obtains one of the N_T elements of $\underline{r}_{mu\text{-}pc}(k)$ and can estimate the data symbols sent to it by performing the mod(M/2) operation on its received symbols.

The transmitter can also transmit multiple data symbol streams to a multi-antenna receiver in the multi-user steered mode. The channel response matrix $\underline{H}_{mu}(k)$ would then include one row vector for each receive antenna of the multi-antenna receiver.

The multi-user steered mode also supports data transmission from multiple multi-antenna transmitters to a single receiver. Each multi-antenna transmitter performs spatial processing on its data symbol stream to steer the stream toward the receiver. Each transmitter also transmits a steered

pilot to the receiver. To the receiver, each transmitter appears as a single transmission. The receiver performs spatial processing (e.g., CCMI, MMSE, and so on) to recover the steered data symbol streams from all transmitters.

Multi-User Non-Steered Spatial Multiplexing Mode

The multi-user non-steered spatial multiplexing mode (or simply, the "multi-user non-steered mode") supports simultaneous data transmission by (1) a single transmitter to multiple receivers (e.g., for the downlink) and (2) multiple transmitters to a single receiver (e.g., for the uplink).

For non-steered transmission from a single transmitter to multiple receivers, the transmitter transmits one data symbol stream from each transmit antenna for a recipient receiver. One or multiple data symbol streams may be transmitted for each recipient receiver. Each recipient receiver includes at least N_T receive antennas and can perform spatial processing to isolate and recover its data symbol stream(s). Each receiver desiring data transmission estimates the SNR for each of the N_T transmit antennas and sends the N_T SNR estimates to the transmitter. The transmitter selects a set of receivers for data transmission based on the SNR estimates from all receivers desiring data transmission (e.g., to maximize the overall throughput).

For non-steered transmission from multiple transmitters to a single receiver, the transmitters transmit data symbol streams from their antennas (i.e., without spatial processing) such that these streams arrive approximately time-aligned at the receiver. The receiver can estimate the channel response matrix for all of the transmitters as if they were one transmitter. The receiver can recover multiple data symbol streams transmitted by these multiple transmitters using any of the techniques described above for the single-user non-steered mode (e.g., CCMI, MMSE, and SIC techniques).

Spatial Processing

Table 2 summarizes the spatial processing at the transmitter and the receiver for the four spatial multiplexing modes described above. For the non-steered modes, receiver processing techniques other than CCMI and MMSE may also be used. The last column in Table 2 indicates whether or not the SIC technique may be used at the receiver.

TABLE 2

Spatial Multiplexing Mode	Transmit F(k)	Receive M(k)	Scaling	SIC
Single-User Steered	V(k)	$U^H(k)$	$\Sigma^{-1}(k)$	no
Single-User Non-Steered	I	$M_{ccmi}(k)$	—	yes
		$M_{mmse}(k)$	$D_{mmse}^{-1}(k)$	
Multi-User Steered (single transmitter to multiple receivers)	$H_{mu-s}^{-1}(k)$	—	—	no
Multi-User Non-Steered (multiple transmitters to single receiver)	I	$M_{ccmi}(k)$	—	yes
		$M_{mmse}(k)$	$D_{mmse}^{-1}(k)$	

For simplicity, the spatial processing for the multi-user steered mode from multiple transmitters to a single receiver and the multi-user non-steered mode from a single transmitter to multiple receivers are not shown in Table 2.

In the following description, a wideband spatial channel can correspond to (1) a wideband eigenmode, for a steered spatial multiplexing mode, (2) a transmit antenna, for a non-steered spatial multiplexing mode, or (3) a combination of one or more spatial channels of one or more subbands. A wideband spatial channel can be used to transmit one independent data stream.

MIMO System

FIG. **1** shows a multiple-access MIMO system **100** with a number of access points (APs) **110** providing communication for a number of user terminals (UTs) **120**. For simplicity, only two access points **110***a* and **110***b* are shown in FIG. **1**. An access point is generally a fixed station that communicates with the user terminals and may also be referred to as a base station or some other terminology. A user terminal may be fixed or mobile and may also be referred to as a mobile station, a wireless device, or some other terminology. A system controller **130** couples to and provides coordination and control for access points **110**.

MIMO system **100** may be a time division duplex (TDD) system or a frequency division duplex (FDD) system. The downlink and uplink (1) share the same frequency band for a TDD system and (2) use different frequency bands for an FDD system. The following description assumes that MIMO system **100** is a TDD system.

MIMO system **100** utilizes a set of transport channels to transmit different types of data. The transport channels may be implemented in various manners.

FIG. **2** shows an exemplary frame and channel structure **200** that may be used for MIMO system **100**. Data transmission occurs in TDD frames. Each TDD frame spans a predetermined time duration (e.g., 2 msec) and is partitioned into a downlink phase and an uplink phase. Each phase is further partitioned into multiple segments **210**, **220**, **230**, **240**, and **250** for multiple transport channels.

In the downlink phase, a broadcast channel (BCH) carries a beacon pilot **214**, a MIMO pilot **216**, and a BCH message **218**. The beacon pilot is used for timing and frequency acquisition. The MIMO pilot is used for channel estimation. The BCH message carries system parameters for the user terminals. A forward control channel (FCCH) carries scheduling information for assignments of downlink and uplink resources and other signaling for the user terminals. A forward channel (FCH) carries FCH protocol data units (PDUs) on the downlink. An FCH PDU **232***a* includes a pilot **234***a* and a data packet **236***a*, and an FCH PDU **232***b* includes only a data packet **236***b*. In the uplink phase, a reverse channel (RCH) carries RCH PDUs on the uplink. An RCH PDU **242***a* includes only a data packet **246***a*, and an RCH PDU **242***b* includes a pilot **244***b* and a data packet **246***b*. A random access channel (RACH) is used by the user terminals to gain access to the system and to send short messages on the uplink. An RACH PDU **252** sent on the RACH includes a pilot **254** and a message **256**.

FIG. **3** shows a block diagram of an access point **110***x* and two user terminals **120***x* and **120***y* in MIMO system **100**. Access point **110***x* is one of the access points in FIG. **1** and is equipped with multiple (N_{ap}) antennas **324***a* through **324***ap*. User terminal **120***x* is equipped with a single antenna **352***x*, and user terminal **120***y* is equipped with multiple (N_{ut}) antennas **352***a* through **352***ut*.

On the downlink, at access point **110***x*, a TX data processor **310** receives traffic data for one or more user terminals from a data source **308**, control data from a controller **330**, and possibly other data from a scheduler **334**. The various types of data may be sent on different transport channels. TX data processor **310** processes (e.g., encodes, interleaves, and symbol maps) the different types of data based on one or more coding and modulation schemes to obtain N_S streams of data symbols. As used herein, a "data symbol" refers to a modulation symbol for data, and a "pilot symbol" refers to a modulation symbol for pilot. A TX spatial processor **320** receives the N_S data symbol streams from TX data processor **310**, performs spatial processing on the data symbols with matri-

ces $\underline{F}_{ap}(k)$, for $k=1 \ldots N_F$, multiplexes in pilot symbols, and provides N_{ap} streams of transmit symbols for the N_{ap} antennas. The matrices $\underline{F}_{ap}(k)$ are derived in accordance with the spatial multiplexing mode selected for use. The processing by TX data processor **310** and TX spatial processor **320** is described below.

Each modulator (MOD) **322** receives and processes a respective transmit symbol stream to obtain a stream of OFDM symbols, and further conditions (e.g., amplifies, filters, and frequency upconverts) the OFDM symbol stream to generate a downlink signal. N_{ap} modulators **322***a* through **322***ap* provide N_{ap} downlink signals for transmission from N_{ap} antennas **324***a* through **324***ap*, respectively, to the user terminals.

At each user terminal **120**, one or multiple antennas **352** receive the N_{ap} downlink signals, and each antenna provides a received signal to a respective demodulator (DEMOD) **354**. Each demodulator **354** performs processing complementary to that performed by modulator **322** and provides a stream of received symbols. For single-antenna user terminal **120***x*, an RX spatial processor **360***x* performs coherent demodulation of the received symbol stream from a single demodulator **354***x* and provides one stream of recovered data symbols. For multi-antenna user terminal **120***y*, RX spatial processor **360***y* performs spatial processing on N_{ut} received symbol streams from N_{ut} demodulators **354** with spatial filter matrices $\underline{M}_{ut}(k)$, for $k=1 \ldots N_F$, and provides N_{ut} streams of recovered data symbols. In any case, each recovered data symbol stream $\{\hat{s}_m\}$ is an estimate of a data symbol stream $\{s_m\}$ transmitted by access point **110***x* to that user terminal **120**. An RX data processor **370** receives and demultiplexes the recovered data symbols to the proper transport channels. The recovered data symbols for each transport channel are then processed (e.g., demapped, deinterleaved, and decoded) to obtain decoded data for that transport channel. The decoded data for each transport channel may include recovered traffic data, control data, and so on, which may be provided to a data sink **372** for storage and/or a controller **380** for further processing.

At each user terminal **120**, a channel estimator **378** estimates the downlink channel response and provides channel estimates, which may include channel gain estimates, SNR estimates, and so on. Controller **380** receives the channel estimates, derives the vectors and/or coefficients used for spatial processing on the transmit and receive paths, and determines a suitable rate for each data symbol stream on the downlink. For example, controller **380***y* for multi-antenna user terminal **120***y* may derive the spatial filter matrices $\underline{M}_{ut}(k)$ for the downlink and the matrices $\underline{F}_{ut}(k)$ of steering vectors for the uplink based on downlink channel response matrices $\underline{H}_{dn}(k)$, for $k=1 \ldots N_F$. Controller **380** may also receive the status of each packet/frame received on the downlink and assemble feedback information for access point **110***x*. The feedback information and uplink data are processed by a TX data processor **390**, spatially processed by a TX spatial processor **392** (if present at user terminal **120**), multiplexed with pilot symbols, conditioned by one or more modulators **354**, and transmitted via one or more antennas **352** to access point **110***x*.

At access point **110***x*, the transmitted uplink signals are received by antennas **324**, demodulated by demodulators **322**, and processed by an RX spatial processor **340** and an RX data processor **342** in a complementary manner to that performed at user terminals **120**. The recovered feedback information is provided to controller **330** and scheduler **334**. Scheduler **334** may use the feedback information to perform a number of functions such as (1) scheduling a set of user terminals for data transmission on the downlink and uplink and (2) assigning the available downlink and uplink resources to the scheduled terminals.

Controllers **330** and **380** control the operation of various processing units at access point **110***x* and user terminal **120**, respectively. For example, controller **380** may determine the highest rates supported by the spatial channels on the downlink for user terminal **120**. Controller **330** may select the rate, payload size, and OFDM symbol size for each spatial channel of each scheduled user terminal.

The processing at access point **110***x* and user terminals **120***x* and **120***y* for the uplink may be the same or different from the processing for the downlink. For clarity, the processing for the downlink is described in detail below.

FIG. **4** shows a block diagram of an embodiment of TX data processor **310** at access point **110***x*. For this embodiment, TX data processor **310** includes one set of encoder **412**, channel interleaver **414**, and symbol mapping unit **416** for each of the N_S data streams. For each data stream $\{d_m\}$, where $m=1 \ldots N_S$, an encoder **412** receives and codes the data stream based on a coding scheme selected for that stream and provides code bits. The coding scheme may include CRC, convolutional, Turbo, low density parity check (LDPC), block, and other coding, or a combination thereof. A channel interleaver **414** interleaves (i.e., reorders) the code bits based on an interleaving scheme. A symbol mapping unit **416** maps the interleaved bits based on a modulation scheme selected for that stream and provides a stream of data symbols $\{s_m\}$. Unit **416** groups each set of B interleaved bits to form a B-bit binary value, where $B \geq 1$, and further maps each B-bit binary value to a specific data symbol based on the selected modulation scheme (e.g., QPSK, M-PSK, or M-QAM, where $M=2^B$). The coding and modulation for each data stream are performed in accordance with coding and modulation controls provided by controller **330**.

FIG. **5** shows a block diagram of an embodiment of TX spatial processor **320** and modulators **322***a* through **322***ap* at access point **110***x*. For this embodiment, TX spatial processor **320** includes N_S demultiplexers (Demux) **510***a* through **510***s*, N_F TX subband spatial processors **520***a* through **520***f*, and N_{ap} multiplexers (Mux) **530***a* through **530***ap*. Each demultiplexer **510** receives a respective data symbol stream $\{s_m\}$ from TX spatial processor **320**, demultiplexes the stream into N_F data symbol substreams for the N_F subbands, and provides the N_F substreams to N_F spatial processors **520***a* through **520***f*. Each spatial processor **520** receives N_S data symbol substreams for its subband from N_S demultiplexers **510***a* through **510***s*, performs transmitter spatial processing on these substreams, and provides N_{ap} transmit symbol substreams for the N_{ap} access point antennas. Each spatial processor **520** multiplies a data vector $\underline{s}_{dn}(k)$ with a matrix $\underline{F}_{ap}(k)$ to obtain a transmit vector $\underline{x}_{dn}(k)$. The matrix $\underline{F}_{ap}(k)$ is equal to (1) a matrix $\underline{V}_{dn}(k)$ of right eigenvectors of $\underline{H}_{dn}(k)$ for the single-user steered mode, (2) the matrix $\underline{F}_{mu}(k)$ for the multi-user steered mode, or (3) the identity matrix $\underline{I}$ for the single-user non-steered mode.

Each multiplexer **530** receives N_F transmit symbol substreams for its transmit antenna from N_F spatial processors **520***a* through **520***f*, multiplexes these substreams and pilot symbols, and provides a transmit symbol stream $\{x_j\}$ for its transmit antenna. The pilot symbols may be multiplexed in frequency (i.e., on some subbands), in time (i.e., in some symbol periods), and/or in code space (i.e., with an orthogonal code). N_{ap} multiplexers **530***a* through **530***ap* provide N_{ap} transmit symbol streams $\{x_j\}$, for $j=1 \ldots N_{ap}$, for N_{ap} antennas **324***a* through **324***ap*.

For the embodiment shown in FIG. **5**, each modulator **322** includes an inverse fast Fourier transform (IFFT) unit **542**, a cyclic prefix generator **544**, and a TX RF unit **546**. IFFT unit **542** and cyclic prefix generator **544** form an OFDM modulator. Each modulator **322** receives a respective transmit symbol stream $\{x_j\}$ from TX spatial processor **320** and groups each set of N_F transmit symbols for the N_F subbands. IFFT unit **542** transforms each set of N_F transmit symbols to the time domain using an N_F-point inverse fast Fourier transform and provides a corresponding transformed symbol that contains N_F chips. Cyclic prefix generator **544** repeats a portion of each transformed symbol to obtain a corresponding OFDM symbol that contains N_F+N_{cp} chips. The repeated portion (i.e., the cyclic prefix) ensures that the OFDM symbol retains its orthogonal properties in the presence of multipath delay spread caused by frequency selective fading. TX RF unit **546** receives and conditions the OFDM symbol stream from generator **544** to generate a downlink modulated signal. N_{ap} downlink modulated signals are transmitted from N_{ap} antennas **324***a* through **324***ap*, respectively.

FIG. **6** shows a block diagram of an embodiment of demodulators **354***a* through **354***ut* and RX spatial processor **360***y* for multi-antenna user terminal **120***y*. At user terminal **120***y*, N_{ut} antennas **352***a* through **352***ut* receive the N_{ap} modulated signals transmitted by access point **110***x* and provide N_{ut} received signals to N_{ut} demodulators **354***a* through **354***ut*, respectively. Each demodulator **354** includes an RX RF unit **612**, a cyclic prefix removal unit **614**, and a fast Fourier transform (FFT) unit **616**. Units **614** and **616** form an OFDM demodulator. Within each demodulator **354**, RX RF unit **612** receives, conditions, and digitizes a respective received signal and provides a stream of chips. Cyclic prefix removal unit **614** removes the cyclic prefix in each received OFDM symbol to obtain a received transformed symbol. FFT unit **616** then transforms each received transformed symbol to the frequency domain with an N_F-point fast Fourier transform to obtain N_F received symbols for the N_F subbands. FFT unit **616** provides a stream of received symbols to RX spatial processor **360***y* and received pilot symbols to channel estimator **378***y*.

For the embodiment shown in FIG. **6**, RX spatial processor **360***y* includes N_{ut} demultiplexers **630***a* through **630***ut* for the N_{ut} antennas at user terminal **120***y*, N_F RX subband spatial processors **640***a* through **640***f* and N_F scaling units **642***a* through **642***f* for the N_F subbands, and N_S multiplexers **650***a* through **650***s* for the N_S data streams. RX spatial processor **360***y* obtains N_{ut} received symbol streams $\{r_i\}$, for $i=1 \ldots N_{ut}$, from demodulators **354***a* through **354***ut*. Each demultiplexer **630** receives a respective received symbol stream $\{r_i\}$, demultiplexes the stream into N_F received symbol substreams for the N_F subbands, and provides the N_F substreams to N_F spatial processors **640***a* through **640***f*. Each spatial processor **640** obtains N_{ut} received symbol substreams for its subband from N_{ut} demultiplexers **630***a* through **630***ut*, performs receiver spatial processing on these substreams, and provides N_S detected symbol substreams for its subband. Each spatial processor **640** multiplies a received vector $\underline{r}_{dn}(k)$ with a matrix $\underline{M}_{ut}(k)$ to obtain a detected symbol vector $\underline{\tilde{s}}_{dn}(k)$. The matrix $\underline{M}_{ut}(k)$ is equal to (1) a matrix $\underline{U}_{dn}^{H}(k)$ of left eigenvectors of $\underline{H}_{dn}(k)$ for the single-user steered mode or (2) the matrix $\underline{M}_{ccmi}(k)$, $\underline{M}_{mmse}(k)$, or some other matrix for the single-user non-steered mode.

Each scaling unit **642** receives N_S detected symbol substreams for its subband, scales these substreams, and provides N_S recovered data symbol substreams for its subband. Each scaling unit **642** performs the signal scaling of the detected symbol vector $\underline{\tilde{s}}_{dn}(k)$ with a diagonal matrix $\underline{D}_{ut}^{-1}(k)$ and provides the recovered data symbol vector $\underline{\hat{s}}_{dn}(k)$. Each multiplexer **650** receives and multiplexes N_F recovered data symbol substreams for its data stream from N_F scaling units **642***a* through **642***f* and provides a recovered data symbol stream. N_S multiplexers **650***a* through **650***s* provide N_S recovered data symbol streams $\{\hat{s}_m\}$, for $m=1 \ldots N_S$.

FIG. **7** shows a block diagram of an embodiment of RX data processor **370***y* at user terminal **120***y*. RX data processor **370***y* includes one set of symbol demapping unit **712**, channel deinterleaver **714**, and decoder **716** for each of the N_S data streams. For each recovered data symbol stream $\{\hat{s}_m\}$, where $m=1 \ldots N_S$, a symbol demapping unit **712** demodulates the recovered data symbols in accordance with the modulation scheme used for that stream and provides demodulated data. A channel deinterleaver **714** deinterleaves the demodulated data in a manner complementary to the interleaving performed on that stream by access point **110***x*. A decoder **716** then decodes the deinterleaved data in a manner complementary to the encoding performed by access point **110***x* on that stream. For example, a Turbo decoder or a Viterbi decoder may be used for decoder **716** if Turbo or convolutional coding, respectively, is performed at access point **110***x*. Decoder **716** provides a decoded packet for each received data packet. Decoder **716** further checks each decoded packet to determine whether the packet is decoded correctly or in error and provides the status of the decoded packet. The demodulation and decoding for each recovered data symbol stream are performed in accordance with demodulation and decoding controls provided by controller **380***y*.

FIG. **8** shows a block diagram of an RX spatial processor **360***z* and an RX data processor **370***z*, which implement the SIC technique. RX spatial processor **360***z* and RX data processor **370***z* implement N_S successive (i.e., cascaded) receiver processing stages for N_S data symbol streams. Each of stages **1** to N_S-1 includes a spatial processor **810**, an interference canceller **820**, an RX data stream processor **830**, and a TX data stream processor **840**. The last stage includes only a spatial processor **810***s* and an RX data stream processor **830***s*. Each RX data stream processor **830** includes a symbol demapping unit **712**, a channel deinterleaver **714**, and a decoder **716**, as shown in FIG. **7**. Each TX data stream processor **840** includes an encoder **412**, a channel interleaver **414**, and a symbol mapping unit **416**, as shown in FIG. **4**.

For stage **1**, spatial processor **810***a* performs receiver spatial processing on the N_{ut} received symbol streams and provides one recovered data symbol stream $\{\hat{s}_{j_1}\}$, where the subscript j_1 denotes the access point antenna used to transmit the data symbol stream $\{s_{j_1}\}$. RX data stream processor **830***a* demodulates, deinterleaves, and decodes the recovered data symbol stream $\{\hat{s}_{j_1}\}$ and provides a corresponding decoded data stream $\{\hat{d}_{j_1}\}$. TX data stream processor **840***a* encodes, interleaves, and modulates the decoded data stream $\{\hat{d}_{j_1}\}$ in the same manner performed by access point **110***x* for that stream and provides a remodulated symbol stream $\{\check{s}_{j_1}\}$. Interference canceller **820***a* performs spatial processing on the remodulated symbol stream $\{\check{s}_{j_1}\}$ in the same manner (if any) performed by access point **110***x* and further processes the result with the channel response matrix $\underline{H}_{dn}(k)$ to obtain N_{ut} interference components due to the data symbol stream $\{s_{j_1}\}$. The N_{ut} interference components are subtracted from the N_{ut} received symbol streams to obtain N_{ut} modified symbol streams, which are provided to stage **2**.

Each of stages **2** through N_S-1 performs the same processing as stage **1**, albeit on the N_{ut} modified symbol streams from the preceding stage instead of the N_{ut} received symbol streams. The last stage performs spatial processing and

decoding on the N_{ut} modified symbol streams from stage N_S-1 and does not perform interference estimation and cancellation.

Spatial processors **810***a* through **810***s* may each implement the CCMI, MMSE, or some other receiver processing technique. Each spatial processor **810** multiplies an input (received or modified) symbol vector $\underline{r}_{dn}^{l}(k)$ with a matrix $\underline{M}_{ut}^{l}(k)$ to obtain a detected symbol vector $\underline{\tilde{s}}_{dn}(k)$, selects and scales one of the detected symbol streams, and provides the scaled symbol stream as the recovered data symbol stream for that stage. The matrix $\underline{M}_{ut}^{l}(k)$ is derived based on a reduced channel response matrix $\underline{H}_{dn}^{l}(k)$ for the stage.

The processing units at access point **110***x* and user terminal **120***y* for the uplink may be implemented as described above for the downlink. TX data processor **390***y* and TX spatial processor **392***y* may be implemented with TX data processor **310** in FIG. **4** and TX spatial processor **320** in FIG. **5**, respectively. RX spatial processor **340** may be implemented with RX spatial processor **360***y* or **360***z*, and RX data processor **342** may be implemented with data processor **370***y* or **370***z*.

For single-antenna user terminal **120***x*, RX spatial processor **360***x* performs coherent demodulation of one received symbol stream with channel estimates to obtain one recovered data symbol stream.

Channel Estimation

The channel response of the downlink and uplink may be estimated in various manners such as with a MIMO pilot or a steered pilot. For a TDD MIMO system, certain techniques may be used to simplify the channel estimation.

For the downlink, access point **110***x* can transmit a MIMO pilot to user terminals **120**. The MIMO pilot comprises N_{ap} pilot transmissions from N_{ap} access point antennas, with the pilot transmission from each antenna being "covered" with a different orthogonal sequence (e.g., a Walsh sequence). Covering is a process whereby a given modulation symbol (or a set of L modulation symbols with the same value) to be transmitted is multiplied by all L chips of an L-chip orthogonal sequence to obtain L covered symbols, which are then transmitted. The covering achieves orthogonality among the N_{ap} pilot transmissions sent from the N_{ap} access point antennas and allows the user terminals to distinguish the pilot transmission from each antenna.

At each user terminal **120**, channel estimator **378** "decovers" the received pilot symbols for each user terminal antenna i with the same N_{ap} orthogonal sequences used by access point **110***x* for the N_{ap} antennas to obtain estimates of the complex channel gain between user terminal antenna i and each of the N_{ap} access point antennas. Decovering is complementary to covering and is a process whereby received (pilot) symbols are multiplied by the L chips of the L-chip orthogonal sequence to obtain L decovered symbols, which are then accumulated to obtain an estimate of the transmitted (pilot) symbol. Channel estimator **378** performs the same pilot processing for each subband used for pilot transmission. If pilot symbols are transmitted on only a subset of the N_F subbands, then channel estimator **378** can perform interpolation on the channel response estimates for subbands with pilot transmission to obtain channel response estimates for subbands without pilot transmission. For single-antenna user terminal **120***x*, channel estimator **378***x* provides estimated downlink channel response vectors $\underline{\hat{h}}_{dn}(k)$, for $k=1 \ldots N_F$, for the single antenna **352**. For multi-antenna user terminal **120***y*, channel estimator **378***y* performs the same pilot processing for all N_{ut} antennas **352***a* through **352***ut* and provides estimated downlink channel response matrices $\underline{\hat{H}}_{dn}(k)$, for $k=1 \ldots N_F$. Each user terminal **120** can also estimate the noise variance for the downlink based on the received pilot symbols and provides the downlink noise estimate, $\hat{\sigma}_{dn}^{2}$.

For the uplink, multi-antenna user terminal **120***y* can transmit a MIMO pilot that can be used by access point **110***x* to estimate the uplink channel response $\underline{\hat{H}}_{up}(k)$ for user terminal **120***y*. Single-antenna user terminal **120***x* can transmit a pilot from its single antenna. Multiple single-antenna user terminals **120** can transmit orthogonal pilots simultaneously on the uplink, where orthogonality may be achieved in time and/or frequency. Time orthogonality can be obtained by having each user terminal cover its uplink pilot with a different orthogonal sequence assigned to the user terminal. Frequency orthogonality can be obtained by having each user terminal transmit its uplink pilot on a different set of subbands. The simultaneous uplink pilot transmissions from multiple user terminals should be approximately time-aligned at access point **120***x* (e.g., time-aligned to within the cyclic prefix).

For a TDD MIMO system, a high degree of correlation normally exists between the channel responses for the downlink and uplink since these links share the same frequency band. However, the responses of the transmit/receive chains at the access point are typically not the same as the responses of the transmit/receive chains at the user terminal. If the differences are determined and accounted for via calibration, then the overall downlink and uplink channel responses may be assumed to be reciprocal (i.e., transpose) of each other.

FIG. **9** shows the transmit/receive chains at access point **110***x* and user terminal **120***y*. At access point **110***x*, the transmit path is modeled by an $N_{ap} \times N_{ap}$ matrix $\underline{T}_{ap}(k)$ and the receive path is modeled by an $N_{ap} \times N_{ap}$ matrix $\underline{R}_{ap}(k)$. At user terminal **120***y*, the receive path is modeled by an N×N matrix $\underline{R}_{ut}(k)$ and the transmit path is modeled by an $N_{ut} \times N_{ut}$ matrix $\underline{T}_{ut}(k)$. The received symbol vectors for the downlink and uplink for each subband may be expressed as:

$$\underline{r}_{dn}(k)=\underline{R}_{ut}(k)\underline{H}(k)\underline{T}_{ap}(k)\underline{x}_{dn}(k),$$

and

$$\underline{r}_{up}(k)=\underline{R}_{ap}(k)\underline{H}^{T}(k)\underline{T}_{ut}(k)\underline{x}_{up}(k), \quad \text{Eq. (33)}$$

where

"T" denotes the transpose. Equation (34) assumes that the downlink and uplink are transpose of one another. The "effective" downlink and uplink channel responses, $\underline{H}_{edn}(k)$ and $\underline{H}_{eup}(k)$, for each subband include the responses of the transmit and receive chains and may be expressed as:

$$\underline{H}_{edn}(k)=\underline{R}_{ut}(k)\underline{H}(k)\underline{T}_{ap}(k) \text{ and } \underline{H}_{eup}(k)=\underline{R}_{ap}(k)\underline{H}^{T}(k)\underline{T}_{ut}(k). \quad \text{Eq. (34)}$$

The effective downlink and uplink channel responses are not reciprocal of one other (i.e., $\underline{H}_{edn}(k) \neq \underline{H}_{eup}^{T}(k)$) if the responses of the downlink and uplink transmit/receive chains are not equal to each other.

Access point **110***x* and user terminal **120***y* can perform calibration to obtain correction matrices $\underline{K}_{ap}(k)$ and $\underline{K}_{ut}(k)$ for each subband, which may be expressed as:

$$\underline{K}_{ap}(k)=\underline{T}_{a}^{-1}(k)\underline{R}_{ap}(k) \text{ and } \underline{K}_{ut}(k)=\underline{T}_{ut}^{-1}(k)\underline{R}_{ut}(k). \quad \text{Eq. (35)}$$

The correction matrices may be obtained by transmitting MIMO pilots on both the downlink and uplink and deriving the correction matrices using MMSE criterion or some other techniques. The correction matrices $\underline{K}_{ap}(k)$ and $\underline{K}_{ut}(k)$ are applied at access point **110***x* and user terminal **120***y*, respectively, as shown in FIG. **9**. The "calibrated" downlink and

uplink channel responses, $\underline{H}_{edn}(k)$ and $\underline{H}_{eup}(k)$, are then reciprocal of one another and may be expressed as:

$$\underline{H}_{eup}(k)=\underline{H}_{up}(k)\underline{K}_{ut}(k)=(\underline{H}_{dn}(k)\underline{K}_{ap}(k))^{T}=\underline{H}_{edn}{}^{T}(k). \quad \text{Eq. (36)}$$

The singular value decomposition of the calibrated uplink and downlink channel response matrices, $\underline{H}_{eup}(k)$ and $\underline{H}_{edn}(k)$, for each subband may be expressed as:

$$\underline{H}_{eup}(k)=\underline{U}_{ap}(k)\underline{\Sigma}(k)\underline{V}_{ut}{}^{H}(k),$$

and

$$H_{edn}(k)=\underline{V}_{ut}{}^{*}(k)\underline{\Sigma}(k)\underline{U}_{ap}{}^{H}(k). \quad \text{Eq. (37)}$$

As shown in equation set (38), the matrices $\underline{V}_{ut}{}^{*}(k)$ and $\underline{U}_{ap}{}^{*}(k)$ of left and right eigenvectors of $\underline{H}_{edn}(k)$ are the complex conjugate of the matrices $\underline{V}_{ut}(k)$ and $\underline{U}_{ap}(k)$ of right and left eigenvectors of $\underline{H}_{eup}(k)$. The matrix $\underline{U}_{ap}(k)$ can be used by access point **110***x* for both transmit and receive spatial processing. The matrix $\underline{V}_{ut}(k)$ can be used by user terminal **120***y* for both transmit and receive spatial processing.

Because of the reciprocal nature of the MIMO channel for the TDD MIMO system, and after calibration has been performed to account for the differences in the transmit/receive chains, the singular value decomposition only needs to be performed by either user terminal **120***y* or access point **110***x*. If performed by user terminal **120***y*, then the matrices $\underline{V}_{ut}(k)$, for $k=1 \ldots N_F$, are used for spatial processing at the user terminal and the matrix $\underline{U}_{ap}(k)$, for $k=1 \ldots N_F$, may be provided to the access point in either a direct form (e.g., by sending entries of the matrices $\underline{U}_{ap}(k)$) or an indirect form (e.g., via a steered pilot). In actuality, user terminal **120***y* can only obtain $\underline{\hat{H}}_{edn}(k)$, which is an estimate of $\underline{H}_{edn}(k)$, and can only derive $\underline{\hat{V}}_{ut}(k)$, $\underline{\hat{\Sigma}}(k)$ and $\underline{\hat{U}}_{ap}(k)$, which are estimates of $\underline{V}_{ut}(k)$, $\underline{\Sigma}(k)$ and $\underline{U}_{ap}(k)$, respectively. For simplicity, the description herein assumes channel estimation without errors.

An uplink steered pilot sent by user terminal **120***y* may be expressed as:

$$\underline{x}_{up,m}(k)=\underline{K}_{ut}(k)\underline{v}_{ut,m}(k)p(k), \quad \text{Eq. (38)}$$

where

$\underline{v}_{ap,m}(k)$ is the m-th column of $\underline{V}_{ut}(k)$ and p(k) is the pilot symbol. The received uplink steered pilot at access point **110***x* may be expressed as:

$$\underline{r}_{up,m}(k)=\underline{u}_{ap,m}(k)\sigma_m p(k)+\underline{n}_{up}(k). \quad \text{Eq. (39)}$$

Equation (40) indicates that access point **110***x* can obtain the matrix $\underline{U}_{ap}(k)$, one vector at a time, based on the uplink steered pilot from user terminal **120***y*.

A complementary process may also be performed whereby user terminal **120***y* transmits a MIMO pilot on the uplink, and access point **110***x* performs singular value decomposition and transmits a steered pilot on the downlink. Channel estimation for the downlink and uplink may also be performed in other manners.

At each user terminal **120**, channel estimator **378** can estimate the downlink channel response (e.g., based on a MIMO pilot or a steered pilot sent by access point **110***x*) and provide downlink channel estimates to controller **380**. For single-antenna user terminal **120***x*, controller **380***x* can derive the complex channel gains used for coherent demodulation. For multi-antenna user terminal **120***y*, controller **380***y* can derive the matrix $\underline{M}_{ut}(k)$ used for receive spatial processing and the matrix $\underline{F}_{ut}(k)$ used for transmit spatial processing based on the downlink channel estimates. At access point **110***x*, channel estimator **328** can estimate the uplink channel response (e.g., based on a steered pilot or a MIMO pilot sent by user terminal **120**) and provide uplink channel estimates to controller **380**. Controller **380** can derive the matrix $\underline{F}_{ap}(k)$ used for transmit spatial processing and the matrix $\underline{M}_{ap}(k)$ used for receive spatial processing based on the uplink channel estimates.

FIG. **9** shows the spatial processing at access point **110***x* and user terminal **120***y* for the downlink and uplink for one subband k. For the downlink, within TX spatial processor **320** at access point **110***x*, the data vector $\underline{s}_{dn}(k)$ is first multiplied with the matrix $\underline{F}_{ap}(k)$ by a unit **910** and further multiplied with the correction matrix $\underline{K}_{ap}(k)$ by a unit **912** to obtain the transmit vector $\underline{x}_{dn}(k)$. The vector $\underline{x}_{dn}(k)$ is processed by a transmit chain **914** within modulators **322** and transmitted over the MIMO channel to user terminal **120***y*. Units **910** and **912** perform the transmit spatial processing for the downlink and may be implemented within TX subband spatial processor **520** in FIG. **5**.

At user terminal **120***y*, the downlink signals are processed by a receive chain **954** within demodulators **354** to obtain the receive vector $\underline{r}_{dn}(k)$. Within RX spatial processor **360***y*, the receive vector $\underline{r}_{dn}(k)$ is first multiplied with the matrix $\underline{M}_{ut}(k)$ by a unit **956** and further scaled with the inverse diagonal matrix $\underline{D}_{ut}{}^{-1}(k)$ by a unit **958** to obtain the vector $\underline{\hat{s}}_{dn}(k)$, which is an estimate of the data vector $\underline{s}_{dn}(k)$. Units **956** and **958** perform the receive spatial processing for the downlink and may be implemented within RX subband spatial processor **640** in FIG. **6**.

For the uplink, within TX spatial processor **392***y* at user terminal **120***y*, the data vector $\underline{s}_{up}(k)$ is first multiplied with the matrix $\underline{F}_{ut}(k)$ by a unit **960** and further multiplied with the correction matrix $\underline{K}_{ut}(k)$ by a unit **962** to obtain the transmit vector $\underline{x}_{up}(k)$. The vector $\underline{x}_{up}(k)$ is processed by a transmit chain **964** within modulators **354** and transmitted over the MIMO channel to access point **110***x*. Units **960** and **962** perform the transmit spatial processing for the uplink.

At access point **110***x*, the uplink signals are processed by a receive chain **924** within demodulators **322** to obtain the receive vector $\underline{r}_{up}(k)$. Within RX spatial processor **340**, the receive vector $\underline{r}_{up}(k)$ is first multiplied with the matrix $\underline{M}_{ap}(k)$ by a unit **926** and further scaled with the inverse diagonal matrix $\underline{D}_{ap}{}^{-1}(k)$ by a unit **928** to obtain the vector $\underline{\hat{s}}_{up}(k)$, which is an estimate of the data vector $\underline{s}_{up}(k)$. Units **926** and **928** perform the receive spatial processing for the uplink.

Spatial Processing for TDD MIMO System

Table 3 summarizes exemplary pilot transmission and spatial processing performed by the access point and the user terminals for data transmission on the downlink and uplink for various spatial multiplexing modes in the TDD MIMO system. For the single-user steered mode, the access point transmits a MIMO pilot to allow the user terminal to estimate the downlink channel response. The user terminal transmits a steered pilot to allow the access point to estimate the uplink channel response. The access point performs transmit and receive spatial processing with $\underline{U}_{ap}(k)$. The user terminal performs transmit and receive spatial processing with $\underline{V}_{ut}(k)$.

For the single-user non-steered mode, for downlink data transmission, the access point transmits a MIMO pilot from all antennas and a data symbol stream from each antenna. The user terminal estimates the downlink channel response with the MIMO pilot and performs receiver spatial processing using the downlink channel estimates. The complementary processing occurs for uplink data transmission.

TABLE 3

Spatial Multiplexing Mode	Downlink Data Transmission	Uplink Data Transmission
Single-User Steered	AP transmits MIMO pilot UT transmits steered pilot AP transmits data with $U_{ap}(k)$ UT receives data with $V_{ut}(k)$	AP transmits MIMO pilot UT transmits steered pilot UT transmits data with $V_{ut}(k)$ AP receives data with $U_{ap}(k)$
Single-User Non-Steered	AP transmits MIMO pilot AP transmits data from each antenna UT uses CCMI, MMSE, etc.	UT transmits MIMO pilot UT transmits data from each antenna AP uses CCMI, MMSE, etc.
Multi-User Steered	UTs transmit orthogonal pilot AP transmits steered data AP transmits steered pilot UTs receive with steered pilot	AP transmits MIMO pilot UTs transmit steered pilot UTs transmit steered data AP uses CCMI, MMSE, etc.
Multi-User Non-Steered	AP transmits MIMO pilot UTs send rate for each AP antenna AP transmits data from each antenna UTs use CCMI, MMSE, etc.	UTs transmit orthogonal pilot AP selects compatible UTs UTs transmits data from each antenna AP uses CCMI, MMSE, etc.

For the multi-user steered mode, for downlink data transmission to single-antenna and/or multi-antenna user terminals, the user terminals transmit orthogonal pilots on the uplink to allow the access point to estimate the downlink channel response. A single-antenna user terminal transmits an unsteered pilot, and a multi-antenna user terminal transmits a steered pilot. The access point derives downlink steering vectors based on the orthogonal uplink pilots, and uses the steering vectors to transmit steered pilots and steered data symbol streams to the selected user terminals. Each user terminal uses the steered pilot to receive the steered data symbol stream sent to the user terminal. For uplink data transmission from multi-antenna user terminals, the access point transmits a MIMO pilot. Each multi-antenna user terminal transmits a steered pilot and a steered data symbol stream on the uplink. The access point performs receiver spatial processing (e.g., CCMI, MMSE, and so on) to recover the data symbol streams.

For the multi-user non-steered mode, for downlink data transmission to multi-antenna user terminals, the access point transmits a MIMO pilot on the downlink. Each user terminal determines and sends back the rate it can receive from each access point antenna. The access point selects a set of user terminals and transmits data symbol streams for the selected user terminals from the access point antennas. Each multi-antenna user terminal performs receiver spatial processing (e.g., CCMI, MMSE, and so on) to recover its data symbol stream. For uplink data transmission from single-antenna and/or multi-antenna user terminals, the user terminals transmit orthogonal (unsteered) pilots on the uplink. The access point estimates the uplink channel response based on the uplink pilots and selects a set of compatible user terminals. Each selected user terminal transmits a data symbol stream from a user terminal antenna. The access point performs receiver spatial processing (e.g., CCMI, MMSE, and so on) to recover the data symbol streams.

Rate Selection

Each data stream for the downlink and uplink is transmitted on a wideband spatial channel m using one of the spatial multiplexing modes. Each data stream is also transmitted at a rate that is selected such that the target level of performance (e.g., 1 percent packet error rate (PER)) can be achieved for that stream. The rate for each data stream can be determined based on the SNR achieved at the receiver for that stream (i.e., the received SNR), where the SNR is dependent on the spatial processing performed at the transmitter and receiver, as described above.

In an exemplary rate selection scheme, the determine the rate for wideband spatial channel m, an SNR estimate, $\gamma_m(k)$, (e.g., in units of dB) for each subband k of the wideband spatial channel is first obtained, as described above. An average SNR, γ_{avg}, is then computed for wideband spatial channel m, as follows:

$$\gamma_{avg,m} = \frac{1}{N_F}\sum_{k=1}^{N_F} \gamma_m(k). \quad \text{Eq. (40)}$$

The variance of the SNR estimates, $\sigma_{\gamma_m}^2$, is also computed as follows:

$$\sigma_{\gamma_m}^2 = \frac{1}{N_F - 1}\sum_{k=1}^{N_F} (\gamma_m(k) - \gamma_{avg,m})^2. \quad \text{Eq. (41)}$$

An SNR back-off factor, $\gamma_{bo,m}$, is determined based on a function $F(\gamma_{avg,m},\sigma_{\gamma_m}^2)$ of the average SNR and the SNR variance. For example, the function $F(\gamma_{avg,m},\sigma_{\gamma_m}^2)=K_b\cdot\sigma_{\gamma_m}^2$ may be used, where K_b is a scaling factor that may be selected based on one or more characteristics of the MIMO system such as the interleaving, packet size, and/or coding scheme used for the data stream. The SNR back-off factor accounts for variation in SNRs across the wideband spatial channel. An operating SNR, $\gamma_{op,m}$, for wideband spatial channel m is next computed, as follows:

$$\gamma_{op,m}=\gamma_{avg,m}-\gamma_{bo,m}. \quad \text{Eq. (42)}$$

The rate for the data stream is then determined based on the operating SNR. For example, a look-up table (LUT) may store a set of rates supported by the MIMO system and their required SNRs. The required SNR for each rate may be determined by computer simulation, empirical measurement, and so on, and based on an assumption of an AWGN channel. The highest rate in the look-up table with a required SNR that is equal to or lower than the operating SNR is selected as the rate for the data stream sent on wideband spatial channel m.

Various other rate selection schemes may also be used.

Closed-Loop Rate Control

Closed-loop rate control may be used for each of the data streams transmitted on multiple wideband spatial channels. Closed-loop rate control may be achieved with one or multiple loops.

FIG. **10** shows a block diagram of an embodiment of a closed-loop rate control mechanism **1000**, which comprises an inner loop **1010** that operates in conjunction with an outer loop **1020**. Inner loop **1010** estimates the channel conditions and determines the rate supported by each wideband spatial channel. Outer loop **1020** estimates the quality of the data transmission received on each wideband spatial channel and adjusts the operation of the inner loop accordingly. For simplicity, the operation of loops **1010** and **1020** for one downlink wideband spatial channel m is shown in FIG. **10** and described below.

For inner loop **1010**, channel estimator **378** at user terminal **120** estimates wideband spatial channel m and provides channel estimates (e.g., channel gain estimates and noise variance estimate). A rate selector **1030** within controller **380** determines the rate supported by wideband spatial channel m based on (1) the channel estimates from channel estimator

378, (2) an SNR back-off factor and/or a rate adjustment for wideband spatial channel m from a quality estimator **1032**, and (3) a look-up table (LUT) **1036** of rates supported by the MIMO system and their required SNRs. The supported rate for wideband spatial channel m is sent by controller **380** to access point **110**. At access point **110**, controller **330** receives the supported rate for wideband spatial channel m and determines the data rate, coding, and modulation controls for the data stream to be sent on this spatial channel. The data stream is then processed in accordance with these controls by TX data processor **310**, spatially processed and multiplexed with pilot symbols by TX spatial processor **320**, conditioned by modulators **322**, and transmitted to user terminal **120**.

Outer loop **1020** estimates the quality of the decoded data steam received on wideband spatial channel m and adjusts the operation of inner loop **1010**. The received symbols for wideband spatial channel m are spatially processed by RX spatial processor **360** and further processed by RX data processor **370**. RX data processor **370** provides the status of each packet received on wideband spatial channel m and/or decoder metrics to quality estimator **1032**. Outer loop **1020** can provide different types of information (e.g., SNR back-off factor, a rate adjustment, and so on) used to control the operation of inner loop **1010**.

Closed-loop rate control described above may thus be performed independently for each downlink and uplink wideband spatial channel, which can correspond to (1) a wideband eigenmode, for the single-user steered mode, or (2) a transmit antenna, for the single-user and multi-user non-steered modes.

Scheduling User Terminals

FIG. **11** shows a block diagram of an embodiment of controller **330** and scheduler **334** for scheduling user terminals for data transmission on the downlink and uplink. Within controller **330**, a request processor **1110** receives access requests transmitted by user terminal **120** on the RACH and possibly access requests from other sources. These access requests are for data transmission on the downlink and/or uplink. Request processor **1110** processes the received access requests and provides the identities (IDs) and the status of all requesting user terminals. The status for a user terminal may indicate the number of antennas available at the terminal, whether the terminal is calibrated, and so on.

A rate selector **1120** receives channel estimates from channel estimator **328** and determines the rates supported by the downlink and/or uplink wideband spatial channels for the requesting user terminals, as described above. For the downlink, each user terminal **120** can determine the rate supported by each of its wideband spatial channels, as described above. The supported rate is the maximum rate that may be used for data transmission on the wideband spatial channel to achieve the target level of performance Each user terminal **120** can send the supported rates for all of its downlink wideband spatial channels to access point **110**, e.g., via the RACH. Alternatively, access point **110** can determine the supported rates for the downlink wideband spatial channels if (1) the downlink and uplink are reciprocal and (2) access point **110** is provided with the noise variance or noise floor at user terminal **120**. For the uplink, access point **110** can determine the supported rate for each wideband spatial channel for each requesting user terminal **120**.

A user selector **1140** selects different sets of one or more user terminals, from among all of the requesting user terminals, for possible data transmission on the downlink and/or uplink. The user terminals may be selected based on various criteria such as system requirements, user terminal capabilities and supported rates, user priority, the amount of data to send, and so on. For the multi-user spatial multiplexing modes, the user terminals for each set may also be selected based on their channel response vectors.

A mode selector **1130** selects the particular spatial multiplexing mode to use for each set of user terminals based on the operating state and capabilities of the user terminals in the set and possibly other factors. For example, the single-user steered mode may be used for a "calibrated" multi-antenna user terminal that has performed calibration so that the channel response for one link (e.g., downlink) can be estimated based on a (e.g., steered) pilot received via the other link (e.g., uplink). The single-user non-steered mode may be used for an "uncalibrated" multi-antenna user terminal that has not performed calibration or cannot support the single-user steered mode for any reason. The multi-user steered mode may be used for downlink transmission to multiple user terminals, each of which is equipped with one or more antennas. The multi-user non-steered mode may be used for uplink transmission by multiple user terminals.

Scheduler **334** receives the sets of user terminals from user selector **1140**, the selected spatial multiplexing mode for each user terminal set from mode selector **1130**, and the selected rates for each user terminal set from rate selector **1120**. Scheduler **334** schedules the user terminals for data transmission on the downlink and/or uplink. Scheduler **334** selects one or more sets of user terminals for data transmission on the downlink and one or more sets of user terminals for data transmission on the uplink for each TDD frame. Each set includes one or more user terminals and is scheduled for data transmission concurrently in a designated transmission interval within the TDD frame.

Scheduler **334** forms an information element (IE) for each user terminal scheduled for data transmission on the downlink and/or uplink. Each information element includes (1) the spatial multiplexing mode to use for data transmission, (2) the rate to use for the data stream sent on each wideband spatial channel, (3) the start and the duration of the data transmission, and (4) possibly other information (e.g., the type of pilot being transmitted along with the data transmission). Scheduler **334** sends the information elements for all scheduled user terminals via the FCCH. Each user terminal processes the FCCH to recover its information element, and thereafter receives a downlink transmission and/or sends an uplink transmission in accordance with the received scheduling information.

FIG. **11** shows an embodiment of the scheduling of user terminals for data transmission when multiple spatial multiplexing modes are supported. The scheduling may be performed in other manners, and this is within the scope of the invention.

FIG. **12** shows a flow diagram of a process **1200** for scheduling user terminals for data transmission in MIMO system **100**. A set of least one user terminal is selected for data transmission on the downlink and/or uplink (block **1212**). A spatial multiplexing mode is selected for the user terminal set from among multiple spatial multiplexing modes supported by the system (block **1214**). Multiple rates are also selected for multiple data streams to be transmitted via multiple spatial channels for the user terminal set (block **1216**). The user terminal set is scheduled for data transmission on the downlink and/or uplink with the selected rates and the selected spatial multiplexing mode (block **1218**).

FIG. **13** shows a flow diagram of a process **1300** for transmitting data on the downlink in MIMO system **100**. Process **1300** may be performed by access point **110***x*. A first plurality of data streams are coded and modulated in accordance with a first plurality of rates to obtain a first plurality of data

symbol streams (block **1312**). For the single-user steered mode, the first plurality of data symbol streams are spatially processed with a first plurality of steering vectors to obtain a first plurality of transmit symbol streams for transmission from multiple antennas to a first user terminal in a first transmission interval (block **1314**). The first plurality of steering vectors are derived such that the first plurality of data streams are transmitted on orthogonal spatial channels to the first user terminal. A second plurality of data streams are coded and modulated in accordance with a second plurality of rates to obtain a second plurality of data symbol streams (block **1316**). For the single-user non-steered mode, the second plurality of data symbol streams are provided as a second plurality of transmit symbol streams for transmission from the multiple antennas to a second user terminal in a second transmission interval (block **1318**). A third plurality of data streams are coded and modulated to obtain a third plurality of data symbol streams (block **1320**). For the multi-user steered mode, the third plurality of data symbol streams are spatially processed with a second plurality of steering vectors to obtain a third plurality of transmit symbol streams for transmission from the multiple antennas to multiple user terminals in a third transmission interval (block **1322**). The second plurality of steering vectors are derived such that the third plurality of data symbol streams are received with suppressed crosstalk at the multiple user terminals.

FIG. **14** shows a flow diagram of a process **1400** for receiving data on the uplink in MIMO system **100**. Process **1400** may also be performed by access point **110***x*. Receiver spatial processing is performed on a first plurality of received symbol streams in accordance with a first spatial multiplexing mode (e.g., the single-user steered mode) to obtain a first plurality of recovered data symbol streams (block **1412**). The first plurality of recovered data symbol streams are demodulated and decoded in accordance with a first plurality of rates to obtain a first plurality of decoded data streams (block **1414**). Receiver spatial processing is performed on a second plurality of received symbol streams in accordance with a second spatial multiplexing mode (e.g., a non-steered mode) to obtain a second plurality of recovered data symbol streams (block **1416**). The second plurality of recovered data symbol streams are demodulated and decoded in accordance with a second plurality of rates to obtain a second plurality of decoded data streams, which are estimates of data streams transmitted by one or multiple user terminals (block **1418**).

Each user terminal performs corresponding processes to transmit data on one or multiple uplink wideband spatial channels and to receive data on one or multiple downlink wideband spatial channels.

Data transmission with multiple spatial multiplexing modes, as described herein, may be implemented by various means. For example, the processing may be implemented in hardware, software, or a combination thereof. For a hardware implementation, the processing units used to perform data processing, spatial processing, and scheduling at the access point may be implemented within one or more application specific integrated circuits (ASICs), digital signal processors (DSPs), digital signal processing devices (DSPDs), programmable logic devices (PLDs), field programmable gate arrays (FPGAs), processors, controllers, micro-controllers, microprocessors, other electronic units designed to perform the functions described herein, or a combination thereof. The processing units at a user terminal may also be implemented on one or more ASICs, DSPs, and so on.

For a software implementation, the processing at the access point and user terminal for data transmission with multiple spatial multiplexing modes may be implemented with modules (e.g., procedures, functions, and so on) that perform the functions described herein. The software codes may be stored in a memory unit (e.g., memory unit **332** or **382** in FIG. **3**) and executed by a processor (e.g., controller **330** or **380**). The memory unit may be implemented within the processor or external to the processor.

Headings are included herein for reference and to aid in locating certain sections. These headings are not intended to limit the scope of the concepts described therein under, and these concepts may have applicability in other sections throughout the entire specification.

The previous description of the disclosed embodiments is provided to enable any person skilled in the art to make or use the present invention. Various modifications to these embodiments will be readily apparent to those skilled in the art, and the generic principles defined herein may be applied to other embodiments without departing from the spirit or scope of the invention. Thus, the present invention is not intended to be limited to the embodiments shown herein but is to be accorded the widest scope consistent with the principles and novel features disclosed herein.

What is claimed is:

1. A method of processing data in a multiple-input multiple-output (MIMO) communication system, comprising:

generating, at an apparatus, an uplink channel response matrix for each of a plurality of transmitting entities;

deriving a steering vector for each of the transmitting entities by decomposing the channel response matrix to obtain a plurality of eigenvectors and a plurality of singular values, and forming the steering vector for each transmitting entity based on an eigenvector corresponding to a largest singular value among the plurality of singular values;

evaluating different sets of the transmitting entities and selecting a best set for transmission and reception;

sending, to each transmitting entity in the selected best set, a rate selected based on the steering vector and the channel response matrix; and

sending the steering vector to each transmitting entity in the selected best set for use in spatially processing data symbol streams to be transmitted to the apparatus from a plurality of transmit antennas at the transmitting entity.

2. The method of claim **1**, further comprising:

obtaining received symbol streams for the data symbol streams transmitted from the at least some of the transmitting entities; and

processing the received symbol streams in accordance with a receiver spatial processing technique to obtain recovered data symbol streams, which are estimates of the data symbol streams.

3. The method of claim **2**, wherein the receiver spatial processing technique is a channel correlation matrix inversion (CCMI) technique or a minimum mean square error (MMSE) technique.

4. The method of claim **2**, wherein the receiver spatial processing technique is a successive interference cancellation (SIC) technique.

5. The method of claim **1**, wherein the steering vector for the transmitting entity is equal to the eigenvector corresponding to the largest singular value.

6. An apparatus in a multiple-input multiple-output (MIMO) communication system, the apparatus comprising:

at least one processor configured to:

generate an uplink channel response matrix for each of a plurality of transmitting entities;

derive a steering vector for each of the transmitting entities by decomposing the channel response matrix to obtain a

plurality of eigenvectors and a plurality of singular values, and forming the steering vector for each transmitting entity based on an eigenvector corresponding to a largest singular value among the plurality of singular values;

evaluate different sets of the transmitting entities and select a best set for transmission and reception;

send a rate to each of the transmitting entities in the selected best set, the rate selected based on the steering vector and the channel response matrix; and

send the steering vector to each of the transmitting entities for use in spatially processing data symbol streams to be transmitted to the apparatus from a plurality of transmit antennas at the transmitting entity.

7. The apparatus of claim **6**, wherein the at least one processor is further to obtain received symbol streams for the data symbol streams transmitted from at least some of the transmitting entities and process the received symbol streams in accordance with a receiver spatial processing technique to obtain recovered data symbol streams, which are estimates of the data symbol streams.

8. The apparatus of claim **7**, wherein the receiver spatial processing technique is a channel correlation matrix inversion (CCMT) technique or a minimum mean square error (MMSE) technique.

9. The apparatus of claim **7**, wherein the receiver spatial processing technique is a successive interference cancellation (SIC) technique.

10. The apparatus of claim **6**, wherein the steering vector for the transmitting entity is equal to the eigenvector corresponding to the largest singular value.

11. An apparatus in a multiple-input multiple-output (MIMO) communication system, comprising:

means for generating an uplink channel response matrix for each of a plurality of transmitting entities;

means for deriving a steering vector for each of the transmitting entities by decomposing the channel response matrix to obtain a plurality of eigenvectors and a plurality of singular values, and forming the steering vector for each transmitting entity based on an eigenvector corresponding to a largest singular value among the plurality of singular values;

means for evaluating different sets of the transmitting entities and selecting a best set for transmission and reception;

means for sending, to each transmitting entity in the selected best set, a rate selected based on the steering vector and the channel response matrix; and

means for sending the steering vector to each transmitting entity in the selected best set for use in spatially processing data symbol streams to be transmitted to the apparatus from a plurality of transmit antennas at the transmitting entity.

12. The apparatus of claim **11**, further comprising:

means for obtaining received symbol streams for the data symbol streams transmitted from at least some of the transmitting entities; and

means for processing the received symbol streams in accordance with a receiver spatial processing technique to obtain recovered data symbol streams, which are estimates of the data symbol streams.

13. The apparatus of claim **12**, wherein the receiver spatial processing technique is a channel correlation matrix inversion (CCMI) technique or a minimum mean square error (MMSE) technique.

14. The apparatus of claim **12**, wherein the receiver spatial processing technique is a successive interference cancellation (SIC) technique.

15. The apparatus of claim **11**, wherein the steering vector for the transmitting entity is equal to the eigenvector corresponding to the largest singular value.

16. A computer-program product in a multiple-input multiple-output (MIMO) communication system comprising a non-transitory computer readable medium having instructions thereon, the instructions comprising:

code for generating, at an apparatus, an uplink channel response matrix for each of a plurality of transmitting entities;

code for deriving a steering vector for each of the transmitting entities by decomposing the channel response matrix to obtain a plurality of eigenvectors and a plurality of singular values, and forming the steering vector for each transmitting entity based on an eigenvector corresponding to a largest singular value among the plurality of singular values;

code for evaluating different sets of the transmitting entities and selecting a best set for transmission and reception;

code for sending, to each transmitting entity in the selected best set, a rate selected based on the steering vector and the channel response matrix; and

code for sending the steering vector to each transmitting entity in the selected best set for use in spatially processing data symbol streams to be transmitted to the apparatus from a plurality of transmit antennas at the transmitting entity.

17. The computer-program product of claim **16**, further comprising:

code for obtaining received symbol streams for the data symbol streams transmitted from at least some of the transmitting entities; and

code for processing the received symbol streams in accordance with a receiver spatial processing technique to obtain recovered data symbol streams, which are estimates of the data symbol streams.

18. The computer-program product of claim **17**, wherein the receiver spatial processing technique is a channel correlation matrix inversion (CCMI) technique or a minimum mean square error (MMSE) technique.

19. The computer-program product of claim **17**, wherein the receiver spatial processing technique is a successive interference cancellation (SIC) technique.

20. The computer-program product of claim **16**, wherein the steering vector for the transmitting entity is equal to the eigenvector corresponding to the largest singular value.

* * * * *